Fire and acoustically rated walls

Technical specification

James Hardie
A smarter way to build

AUSTRALIA
JULY 2009

CONTENTS

1	**INTRODUCTION**	**2**
1.1	Application	2
1.2	Overview of typical James Hardie separating wall system	3
2	**INSTALLATION**	**3**
2.1	General	3
2.2	Framing	3
2.3	Acoustic infill	4
2.4	Fasteners	4
2.5	Sheeting	5
2.6	Jointing systems	5
2.7	Caulking and sealing materials	5
2.8	Control joints	5
3	**JUNCTION AND PENETRATION DETAILS**	**6**
3.1	General	6
3.2	Wall to ceiling junction	6
3.3	Wall to floor junction	6
3.4	Joining to existing masonry wall	6
3.5	Door trimming	6
3.6	Floor to wall coving in clean areas	6
3.7	Floor to wall junction at shower tray	6
3.8	Wall to bath junction	6
3.9	Internal corners	6
3.10	External corners	6
3.11	Service penetrations - general	6
3.12	Service penetrations - electrical services	6
3.13	Service penetrations - water services	7
3.14	Service penetrations - pipes	7
3.15	Service penetrations - fire dampers	7
4	**RESIDENTIAL CONSTRUCTION DETAILS**	**8**
4.1	General	8
4.2	Timber framing and fixing requirements	8
4.3	Framing - two or three storey buildings	8
4.4	Villaboard lining fixing requirements	8
4.5	Fixing to achieve bracing	8
4.6	Plasterboard lining fixing requirements	9
4.7	Wet areas	9
4.8	Electrical penetrations	9
4.9	Steel frame separating walls	9
4.10	James Hardie separating wall alternative	9
4.11	External walls	10
5	**DETAILS**	**10**

WE VALUE YOUR FEEDBACK

To continuously improve the development of our products and systems, we value your input. Please send any suggestions, including your name, contact details, and relevant sketches to:

Ask James Hardie™
Fax 02 9638 9535
literaturefeedback@jameshardie.com.au

1 INTRODUCTION

1.1 APPLICATION

This manual provides the technical specification and construction details for James Hardie fire and acoustically rated walls, framed from timber or steel, for use in residential and commercial applications.

These fire and acoustically rated walls can be used to meet a wide range of performance specifications and service requirements. The right system for your application must be selected from the James Hardie 'Fire and acoustically rated walls Design Manual', which identifies applications such as:

- Separating walls in quality multi-residential construction
- Separating walls in office buildings
- External walls required to be fire resistant
- Bathroom linings
- Hospital corridor walls subject to trolley impact
- Wall linings in transit areas and schools
- Walls in security type buildings

In addition, the Design Manual sets out structural considerations for fire-rated and non-fire rated, loadbearing and non-loadbearing systems, providing required framing arrangements.

For **internal** partition walls, Villaboard® lining is the main component used. It can also provide significant bracing from the time of erection.

For **external** cladding applications, a range of James Hardie building products are available for fire and acoustically rated construction.

Refer to the James Hardie product installation manuals for details and specification on the use of these linings and claddings.

Finally, make certain that the as-built system satisfies the requirements of the BCA and the details presented in this literature.

If you are a specifier...
or other responsible party for a project, ensure the information in these specifications is appropriate for the application you are planning and that you undertake specific design and detailing for areas which fall outside the scope of these specifications.

If you are an installer...
ensure that you follow the design, moisture management and associated details and material selection provided by the designer and the relevant James Hardie Installation Manuals.

Make sure your information is up to date
When specifying or installing James Hardie products, ensure you have the current manual. Additional installation information, warranties and warnings are available at www.jameshardie.com.au or Ask James Hardie™ on 13 11 03.

NOTE
Throughout this manual, the following notations have been used:

FR Plasterboard: means fire resistant plasterboard.
W & FR Plasterboard: means water and fire resistant plasterboard.

2 INSTALLATION

1.2 OVERVIEW OF TYPICAL JAMES HARDIE SEPARATING WALL SYSTEM

In the lead up to the May 2004 revision to the Building Code of Australia (BCA), it became clear that occupiers of multi-residential properties are generally concerned about the amount of noise they experience. In quality residential construction, residents expect to hear almost no noise from the adjoining occupancy. To achieve this, it is necessary to design and construct separating walls with superior sound insulating properties.

The basic discontinuous system (See Figure 1) consists of two separate timber or steel frames, lined with Villaboard lining and fire resistant plasterboard to achieve specific fire ratings.

The wall can be completely covered by the base sheet, without interruption, to ensure the acoustic integrity of the system.

Using two separate frames further reduces impact sound transmission.

Depending on the thickness of Villaboard lining and fire resistant plasterboard used, James Hardie timber-framed systems can achieve a FRL of up to 90/90/90 (eg System JH-235) and steel-framed systems up to 120/120/120 (System JH-416).

To achieve the required fire and acoustic performance, the separating wall must be installed in strict accordance with the recommendations in this manual and the BCA.

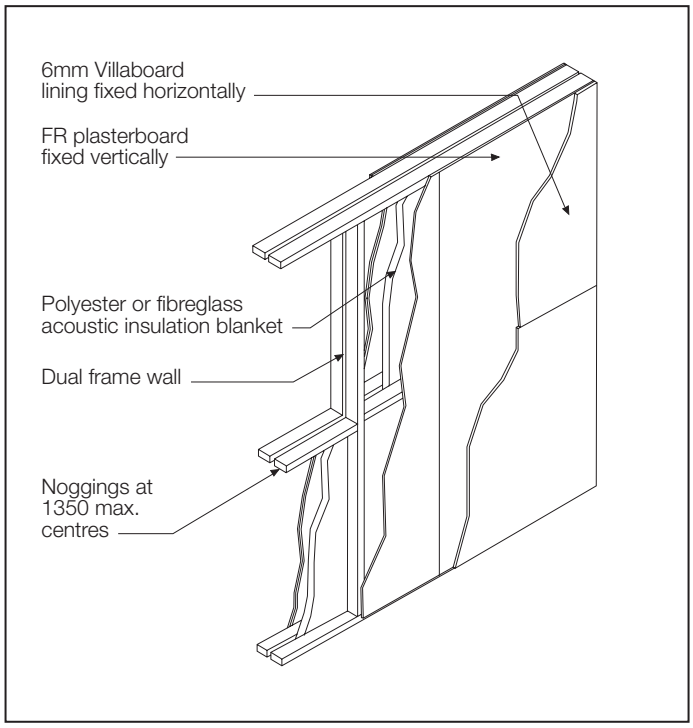

FIGURE 1 BASIC DETAILS OF THE JAMES HARDIE DISCONTINUOUS WALL SYSTEM

NOTE
The order of the linings is interchangeable.

2.1 GENERAL

The James Hardie Fire and acoustically rated walling systems must be installed in accordance with James Hardie current printed instructions, to achieve the acoustic and fire rated performance requirements specified in the contract documents.

2.2 FRAMING

2.2.1 General

James Hardie internal linings and external cladding can be fixed to either timber or light gauge domestic type steel framing. The framing used must comply with the relevant building regulations and standards and the requirements of this manual.

The studs must be spaced at not more than 600mm centres.

Dual frames should be spaced not less than 25mm apart, however, the spacing may be increased to 50mm to provide more bearing area to support trusses.

2.2.2 Timber

Use only seasoned timber. Unseasoned timber must not be used, as it is prone to shrinkage and can cause sheets to move.

> 'Timber used for house construction must have the level of durability appropriate for the relevant climate and expected service life and conditions; that is exposure to insect attack or to moisture, which could cause decay'.

Reference AS1684.2 'Residential Timber Framed Construction'.

The minimum stud width is typically 35mm. However, where butt jointing is used, the minimum stud width must be 38mm so as to properly accommodate the joint.

2.2.3 Steel

Studs must not be less than 38mm wide at butt joints. The minimum size for steel stud framing should be 64mm deep by 0.55mm base metal thickness (BMT). Steel framing must be designed in accordance with AS/NZS 4600 'Cold Formed Steel Structures'. Steel sections shall be galvanised or zinc coated of 0.55 - 1.6mm BMT.

NOTE
For both timber and steel framing, larger sections than the minimum may be used. The use of larger sections will not affect FRL levels and R_w values will be at least the same as the values published for the smaller sections.

2.2.4 Noggings

Noggings must be provided for structural requirements and be spaced at no more than 1350mm. A row of noggings must be provided behind all horizontal sheet joints.

For high impact walls, additional noggings may be required where walls will be subject to high impact loading, refer to the Design Manual Clause 4.6.3.

2.3 ACOUSTIC INFILL

Acoustic infill must be installed to ensure that a continuous sound barrier is formed between studs. Refer to the Design Manual, Clause 3.7.2.

Acoustic insulation may be in the form of blanket or batts. When using blanket, take care to avoid sagging of the blanket and do not leave any gaps. Where batts are used, ensure that sagging or gaps do not occur between batts and framing. Leaving any gaps will reduce the acoustic performance.

For ease of installation and to reduce the chance of gaps, James Hardie recommends the use of blankets to form a complete acoustic barrier. A simple method of installing the blanket is to drive nails or screws into the studs near the edge of the stud avoiding contact with the other frame. Then hang the blanket on the nails or screws.

2.4 FASTENERS

2.4.1 Fastener Durability

Fasteners must have the appropriate level of durability required for the intended project. This is of particular importance in coastal areas, areas subject to salt spray and other corrosive environments.

Fasteners must be fully compatible with all other material that they are in contact with to ensure the durability and integrity of the assembly.

Contact fastener manufacturers for more information.

NOTE

For external fastener information refer to Section 4.11.4

2.4.2 Steel frames

To select the correct screws for an internal application see Table 1.

* 25mm long streaker screws may be more suitable if the flange of the stud deflects excessively before the screw begins to penetrate.

† If overlaying 12mm Villaboard lining over 16mm plasterboard Ask James Hardie™ on 13 11 03 for advice.

‡ When screw fixing 9mm or 12mm Villaboard lining to 0.55 - 0.75mm BMT framing. Pre drilling or pre-dimpling may make screw fixing easier.

2.4.3 Timber frames

To select the correct nails an internal application see Table 2.

TABLE 1

SCREW SELECTION - INTERNAL WALL APPLICATION

PRODUCT	STEEL STUDS 0.55 - 0.75mm BMT		STEEL STUDS 0.8 - 1.6mm BMT	
	Against frame	2nd layer	Against frame	2nd layer
6mm Villaboard lining	Buildex FibreTEKS® 20mm long	Buildex FibreTEKS® 40mm long	32mm HardiDrive screws	40mm HardiDrive screws
9/12mm Villaboard lining	Buildex FibreTEKS® 30mm long	Buildex FibreTEKS® 40mm long	32mm HardiDrive screws	40mm HardiDrive screws
13/16mm FR plasterboard	No. 6 x 25 plasterboard needle point screws	No. 6 x 45 plasterboard needle point screws	No. 6 x 25 plasterboard needle point screws	No. 6 x 45 plasterboard needle point screws

®denotes a registered mark of Buildex

TABLE 2

NAIL SELECTION - INTERNAL WALL APPLICATION

PRODUCT	TIMBER STUDS	
	Against frame	2nd layer
6mm Villaboard lining	2.8 x 30 FC nails	2.8 x 50 FC nails
9/12mm Villaboard lining	2.8 x 30 FC nails	2.8 x 50 FC nails
13/16mm FR plasterboard	50mm plasterboard nails	50mm plasterboard nails

NOTE

When nailing 9mm or 12mm Villaboard lining to timber framing, pre-drilling may make nailing easier.

2.5 SHEETING

2.5.1 General

To retain fire and acoustic values, you must pay particular attention to the installation of the sheeting. This involves following the prescribed method of sheeting and ensuring that all construction joints and gaps are filled when you have completed the sheeting installation.

The sheeting installation also provides a guide for the installation of the plasterboard. For further information on the installation of the plasterboard refer to plasterboard manufacturers' fixing instructions.
For fire-rated systems, the order of the linings on a particular face of the wall my be interchanged.

Although the following clauses refer to Villaboard lining as the internal lining, other approved James Hardie internal linings may be used. Refer to Section 4.5 of the Fire and Acoustically Rated Walls Design Manual for more information.

NOTE
Separating walls exposed to the weather during construction must be covered with a sheet of plastic.

2.5.2 Fixing Villaboard lining to framing

When you are fixing only one layer of Villaboard lining, it is recommended that the Villaboard lining be fixed horizontally. For instructions on fixing only one layer of Villaboard lining, refer to the Villaboard lining Installation Manual.

When the Villaboard lining will be installed over plasterboard, it is recommended that the Villaboard lining be installed vertically.

This will facilitate installation of the plasterboard layer. Fix Villaboard lining as per Figure 2.

If required, install all services and insulation into the wall cavity. Install Villaboard lining on the other side of the frame using the same method, and stagger the butt joints to ensure they do not occur on the same stud on opposite sides of the wall.

This will improve the frame's structural stability and is necessary to achieve the acoustic values. To achieve staggered butt joints on the second side, cut the first sheet to half width ensuring that joints are staggered on alternate studs to joints on the first side.
At door and window openings, fix Villaboard lining around the openings so sheet edges do not coincide with the side of the door or window. This will reduce the possibility of joints cracking due to structural movement.

2.5.3 Fixing plasterboard over Villaboard lining

Where possible, fix the sheets horizontally. Vertically fixed sheets may be subject to the effect of glancing light upon joints.

Stagger the butt joints of the plasterboard with the joints of the Villaboard lining by at least 300mm.

Tape and set plasterboard joints.

See Figure 3 for fixing details.

Fix plasterboard in accordance with manufacturer's fixing instructions.

2.5.4 Fixing plasterboard to framing

When the plasterboard will be installed over Villaboard lining, fix the plasterboard vertically, fixing edges of adjacent sheets centrally on studs.

When using a steel frame, start fixing sheets 50mm from top and bottom of frame. Fix plasterboard in accordance with manufacturer's fixing instructions. See Figure 4 for fixing details.

2.5.5 Fixing Villaboard lining over plasterboard

Fix the sheets horizontally where possible. Sheets fixed vertically may be subject to the effect of glancing light upon joints.

Stagger the butt joints of the Villaboard lining with the joints of the plasterboard by at least 300mm.

Tape and set joints where required. See Figure 5 for fixing details.

2.5.6 Same lining orientation option

Villaboard lining may be installed over plasterboard either vertically or horizontally. Vertical joints must occur on studs. All joints (vertical and horizontal) must be staggered a minimum of 300mm from the plasterboard joint. Tape and flush set the joints. See Figure 6 for the vertically fixed option.

2.6 JOINTING SYSTEMS

Refer to James Hardie Villaboard Lining Installation Manual.

NOTE
If a two-layer system is selected, the layer fixed to the frame does not require jointing. These joints can be left unfilled prior to installation of second layer.

2.7 CAULKING AND SEALING MATERIALS

Where walling systems are required to have fire resistance levels and provide noise insulation, all gaps around the perimeter or services must be filled with an approved compound such as:

- Cornice cement - proprietary plaster-based adhesive.
- Fire resistant grade sealant (flexible) - compatible for use with fibre cement and plasterboard sheets - intumescent sealant eg Fire Barrier or equivalent, approved silicone sealant. The sealant may need to be water resistant if required in a wet area.

2.8 CONTROL JOINTS

Control joints are required on long runs of wall at the following maximum centres:

TABLE 3

MAXIMUM SPACING FOR CONTROL JOINTS (m)			
	STEEL		TIMBER
	0.55 - 0.80mm BMT	0.80 - 1.6mm BMT	
General	9.0	6.0	7.2
Tiled walls	4.8		4.2

NOTE
When wall is selected for acoustic properties control joints must be staggered. When walls are to be tiled use box sections.

For best results, provide the control joints at points such as door heads and over large windows. For details of non-fire rated control joints see Figure 7.

When using multiple layers, run control joint through all layers. At control joints, provide a break in the tiles and install double studs, back to back. For details of fire rated control joints see Figure 8.

3 JUNCTION AND PENETRATION DETAILS

3.1 GENERAL
This section includes details for different wall junctions.

3.2 WALL TO CEILING JUNCTION
A deflection head is required where the deflection of the concrete slab above the wall system is a design consideration, see Figure 9. For an alternative detail, see Figure 10.

Where a deflection head is not required, a plaster cornice can be used. Alternatively, to achieve a flush appearance, the gap at the top of the wall lining can be filled with cornice cement. See Figure 11.

3.3 WALL TO FLOOR JUNCTION
For general wall to floor junction details, see Figure 12.
Surface mounted skirtings (flush or ducted) can be applied to the face of the wall linings or to each side of the framing.

3.4 JOINING TO EXISTING MASONRY WALL
The preferred methods of joining a James Hardie Fire and acoustically rated lightweight wall systems to a masonry surface are shown in Figure 13.

3.5 DOOR TRIMMING
Where metal studs are used, the studs trimming the door opening should be boxed, and the head trim pop riveted to the studs. See Figure 14.

3.6 FLOOR TO WALL COVING IN CLEAN AREAS
In designing clean rooms, a common requirement is for a seamless epoxy resin-coated floor to be covered at the junction with the wall. Where the wall is required to be fire rated, you can maintain the integrity of the fire resistance by using either of the alternative details shown in Figure 15.

3.7 FLOOR TO WALL JUNCTION AT SHOWER TRAY
Where a shower recess in a wet area abuts a fire rated wall, the normal requirements for waterproofing the area must still be provided. See Figure 16. This detail shows wall tiling fixed directly to the wall lining with no provision for a service cavity. In this instance, the pipe work and tap and shower rose penetrations should preferably be located on a return wall. The concrete slab is set down for an inset shower tray, to assist with achieving the required waterproofing. For more information on wet area construction refer to the James Hardie Wet Area Construction Design Manual.

3.8 WALL TO BATH JUNCTION
Where a bath abuts a fire rated wall, the normal requirements for waterproofing in a wet area must still be maintained. See Figure 17. The service cavity shown in this detail provides a useful way of over-flashing the bath rim as well as the means of running the water pipes to the taps. The cavity must be sufficiently deep to accommodate the tap bodies and support. For more information on wet area construction refer to the James Hardie Wet Area Construction Design Manual.

3.9 INTERNAL CORNERS
Internal corners may be flush jointed using perforated paper tape embedded in bedding cement and finished with topping cement. A 35 x 35 or 50 x 50 x 0.75mm metal angle must be fixed to the studs to assist in reinforcing the corner joint. For non-fire rated corners see Figure 18.

3.10 EXTERNAL CORNERS
Perforated metal external corner angles should be fixed over sheet edges with fasteners at 300mm centres on each side. These may be set over to provide a smooth finish. See Figure 18 for a non-fire rated wall detail. Double-layered fire wall corners are treated similarly.

3.11 SERVICE PENETRATIONS - GENERAL
3.11.1 General
In general, James Hardie or the BCA do not recommend service penetrations in fire and acoustically rated walls. Where service penetrations cannot be avoided, take particular care to ensure that the FRLs and acoustic values are not diminished.

3.11.2 With service cavity
The addition of a service cavity using a 28mm furring channel on one or both sides can overcome a number of problems associated with walls containing plumbing and other services.

The use of a service cavity can also assist in reducing noise generated in pipes. Access to the service for maintenance purposes can also be improved. See Figure 19.

The plasterboard and Villaboard lining are separated by furring channels, typically 28mm deep, spaced at 450mm centres. The ends of the furring channel may be spaced up to 150mm apart for the purposes of running services.

Service cavities detailed for single stud systems may be incorporated into any of the other systems described in this manual.

3.12 SERVICE PENETRATIONS - ELECTRICAL SERVICES
3.12.1 General
1. Minimum distance between penetration edges and studs: 50mm.
2. Minimum distance between adjacent penetration edges: 300mm.
3. Baffles, where required, must extend 300mm above and below outlets and extend the full width between studs.
4. Electrical boxes (power point and light switch) require careful attention to maintain fire and acoustic ratings of the stud wall system. Minor air gaps around the boxes can greatly reduce the acoustic performance of wall systems.

Care must be taken when caulking around penetrations to eliminate all acoustic leakages.

3.12.2 FRL 60/60/60 construction
i) Penetrations one side only
- Two electrical outlets maximum permitted to penetrate one wall face between adjacent studs.
- No baffle or insulation is required in the wall cavity.

ii) Penetrations both sides
- Two electrical outlets maximum permitted to penetrate between adjacent studs.
- A baffle consisting of one layer of 13mm fire resistant plasterboard is required. See Figure 20.

NOTE
The baffle must extend 300mm above and below outlets. A baffle consisting of 2 layers of 16mm fire resistant plasterboard is required for FRL 120/120/120 construction, for penetrations on one or both sides.

3.12.3 FRL 120/120/120 construction

Penetration one or both sides

- Two electrical outlets maximum permitted to penetrate between adjacent studs.
- A baffle consisting of two layers of 16mm fire resistant plasterboard.

NOTE

A baffle is also required where the penetration is on one side of the wall only. See Figure 25 and note regarding baffle.

3.12.4 Fire rated electrical boxes

Proprietary electrical boxes are available which do not require baffles to maintain fire performance. Where these are used, manufacturer's recommendation must be followed.

It is essential you ensure that the use of such boxes, particularly in back to back configurations, meets the acoustic attenuation level specified for the wall.

3.12.5 Cable penetrations

Penetrations may be sealed by using either intumescent strips or sealant. The methods shown in Figure 21 and Figure 22 have been tested and achieved a FRL 120/120/120.

3.13 SERVICE PENETRATIONS - WATER SERVICES

3.13.1 General

Care must be exercised where water services (eg taps and pipes) penetrate fire resistant and water resistant plasterboard. The requirements listed below must be observed.

3.13.2 FRL 60/60/60 construction

For 60/60/60 construction see Figure 23.

i) Tap penetrations one side only

- Two taps only permitted to penetrate one wall face between adjacent studs.
- Taps/pipes must not be supported by the wall linings, but by a timber batten fixed between the studs.
- Minimum distance between penetration edges and studs is 20mm.

ii) Tap penetrations both sides

- Two taps only permitted to penetrate each wall face between adjacent studs, and must be kept clear of the lining sheets.

NOTE

No baffle required in the wall cavity for FRL 60/60/60.

3.13.3 FRL 120/120/120 construction

For 120/120/120 construction see Figure 24.

i) Tap penetrations one side only

- Two taps only permitted to penetrate one wall face between adjacent studs, and pipes must be kept clear of the lining sheets and baf fle.
- Provide a baffle consisting of two layers of 16mm fire resistant and water resistant plasterboard the full width between studs.
- Baffle to extend 300mm above and below penetrations.
- Taps must not be supported by the wall linings, but by a timber batten fixed between the studs.
- Minimum distance between penetration edges and studs is 20mm.

ii) Tap penetrations both sides.

- Not permitted

Further information on water services in timber framed construction is provided in the James Hardie Fire and Acoustically Rated Walls Design Manual.

3.14 SERVICE PENETRATIONS - PIPES

Both steel and copper pipes may fully penetrate a fire rated wall provided the penetrations on each face are sealed with intumescent products as shown in Figure 25 or by using fire collars in accordance with manufacturers' recommendations.

The same detail applies for FRL 60/60/60 to 120/120/120 construction.

3.15 SERVICE PENETRATIONS - FIRE DAMPERS

The interface between the wall lining reveal and fire damper frame must be carefully sealed.

Typical details shown are kindly supplied by fire damper manufacturer Thomas Clark & Son Pty Ltd. Details should be confirmed with the fire dampener manufacturer. See Figure 26.

Fire Test Report for Service Penetrations: CSIRO FSV 0220.

4 RESIDENTIAL CONSTRUCTION DETAILS

4.1 GENERAL

The fire resistance of the wall must be fully maintained. Particular care must be taken to ensure the fire resistance is not diminished at the abutment with internal non-fire rated walls and at external walls. All gaps must be blocked to ensure that there is no spread of flame during a fire.

It is particularly important to block the spread of fire in the roof space.

Figure 27 shows a James Hardie preferred system extending between external walls.

Requirements for junctions at circled details A to D are shown in Figure 28 to Figure 31. Details A, C and D show options for both masonry and external cladding intersections.

Treatment at the eaves overhang is critical. Spread of fire is prevented by extending the separating wall into the eaves.

This essential safeguard is often overlooked. See Figure 32.

The cross-hatching indicates the area of the eaves that must also be fire separated.

This can be a single frame similar to that used in the roof space. See Clause 4.7.2 of Design Manual.

4.2 TIMBER FRAMING AND FIXING REQUIREMENTS

Framing and fixing must be in accordance with AS 1684. The timber dimensions used in this manual refer to the usual minimum dimensions of seasoned timber. For alternative timber sizes see Table 1.3 of AS 1684.2.

Internal walls systems

For frames up to 3m high use 70 x 45mm studs and plates, and 70 x 35mm noggings at 1350mm maximum. 90 x 35 studs may be used instead of 70 x 45 studs.

Where the height of a separating wall exceeds 3m the stud size must be increased to meet fire resistance requirements as shown in Table 5 of the James Hardie Fire and acoustically rated walls Design Manual.

External walls systems

For frames up to 3.3m high, use 90 x 45mm studs and plates, and 90 x 45mm noggings at 1350mm maximum centres.

Where the height of an external wall exceeds 3.3m, the stud size must be increased to meet fire resistance requirement as shown in Table 5 of the James Hardie Fire and Acoustically Rated Walls Design Manual.

In the case of Class 2 and 3 Buildings, the timber size required to meet structural loads must be determined by a professional engineer.

The studs must be spaced at not more than 600mm centres, with noggings at 1350mm maximum spacing.

Staggered stud frames must have studs spaced 300mm maximum centres apart.

Dual frames should be spaced 25mm apart. The spacing can be increased, up to 50mm, to provide more bearing area to support trusses.

Roof space

The joints in the separated fire rated wall linings, which are continued into the roof space can be butted together and not set.

4.3 FRAMING – TWO AND THREE STOREY BUILDINGS

Joists and beams should not penetrate the separating wall.

Timber joists which are fixed in the same direction as the separating wall should be placed hard against the Villaboard lining because the timber contributes to the fire protection. See Figure 33, 34, 35 and 36 for alternative framing options.

If open or narrow web joists are used, it will be necessary to install a solid timber section at wall only, not less than 45mm thick, as shown in Figure 34.

If the joists are transverse to the separating wall, they should be supported by joist hangers or a steel angle as shown in Figure 35.

Steel beams should not be supported on, or penetrate, the separating wall. Steel columns can be enclosed within the wall provided the support to the beam is such that in the event of a floor collapse, the support will allow rotation of the beam. A suitable design is shown in Figure 36.

4.4 VILLABOARD LINING FIXING REQUIREMENTS

It is recommended that the Villaboard lining be applied against the frame to provide bracing (see Design Manual Clause 4.7.4).

The sheets may be fixed vertically (for preference) allowing a gap of approximately 6mm between the bottom of the sheets and the floor. Later, this gap must be sealed with cornice cement or fire resistant sealant or mastic eg propriety intumescent mastic or silicone brick and concrete sealant.

For acoustic and fire reasons, joints on either side of the frame must be offset.

Sheets may be butted and require no setting or sealing of the joints as long as any obvious gaps not located over a stud or nogging are closed by any convenient method (eg sealant, setting or backing). This will maintain the acoustic properties of the system. If fibre cement sheet joints need to be set, refer to James Hardie Villaboard Lining Installation Manual for information.

Nail at 200mm along sheet edges and at 300mm centres in the field of the sheet using 2.8mm x 30mm long galvanised fibre cement nails. Nails should not be less than 12mm from sheet edges and 50mm from corners (see Figure 37). Refer to Tables 1 and 2 for further information.

If both linings on the same side are fixed in the same direction, joints must be offset by at least 300mm.

NOTE

When lining is reversed and fibre cement sheeting is fixed over plasterboard sheeting use 2.8mm x 50mm long galvanised fibre cement nails.

4.5 FIXING TO ACHIEVE BRACING

Villaboard lining can also act as structural bracing. Bracing sheets must be fixed with a vertical orientation and should extend to the frame edges. For further information refer to the James Hardie Structural Bracing Design Manual.

4.6 PLASTERBOARD LINING FIXING REQUIREMENTS

Apply fire resistant plasterboard over the Villaboard lining as part of the internal lining work. Refer to Section 4.5 of the Fire and Acoustically Rated Walls Design Manual for approved plasterboard linings.

The fire resistant plasterboard should be fixed horizontally and extend to the full height and width of the wall, with no gaps at the perimeter or the joints. It should be installed before the standard plasterboard is fixed on the abutting walls.

Fix using 2.8mm x 50mm long plasterboard nails spaced at 200mm along sheet edges and 300mm in the field of the board, refer to Tables 1 and 2 for more information.

Using paper tape, set and finish the joints in the plasterboard. Fill any gaps with cornice cement or fire resistant sealant eg silicone. Although, when plasterboard lining is installed as the 1st layer, the plasterboard joints may be butted together and not set.

For further information on fixing plasterboard contact the relevant plasterboard manufacturer.

NOTE
The Villaboard lining is usually fixed vertically and the fire resistant plasterboard horizontally. If they are both fixed in the same direction, joints in the plasterboard must not coincide with joints in the Villaboard lining. Offset the joints by at least 300mm.

4.7 WET AREAS

4.7.1 General

When a bathroom wall forms part of the separating wall, Villaboard lining, which is moisture resistant when installed and maintained correctly, should be used as the tile substrate. As this is usually a small area, the most convenient method is to over-sheet the fire resistant plasterboard with another layer of Villaboard lining. If the wall forms part of a shower recess use water and fire resistant plasterboard. Nail using 2.8 x 50mm fibre cement nails.

Separating walls must not be recessed to accommodate the lip of a bath. A recommended construction to accommodate the lip is shown in Figure 38, using battens to create the required cavity.

When interchanging the internal lining layers in the same run of wall, the walls are joined as shown in Figure 8a.

Fore more information on wet area construction, refer to the James Hardie Wet Area Construction Design Manual. Ask James Hardie™ on 13 11 03.

NOTE
Where a single or staggered wall frame is to be used service cavities must be provided.

4.7.2 Service cavities

If the installation of pipes in the separating walls cannot be avoided, it is recommended that a service cavity be provided.

After the separating wall has been completed and the plumbing installed, battens are fixed to the wall at not more 600mm centres to create the required cavity and the Villaboard lining is then applied as the tile substrate. See Figure 39.

4.7.3 Tap penetrations

In quality residential buildings, tap penetrations on separating walls should be avoided. While it is not difficult to maintain the fire resistance, the acoustic properties of the wall may be diminished. Consider using a service cavity as described in Clause 4.7.2.

Where penetrations cannot be avoided, the fire resistance of the wall must be maintained. To achieve this, the penetrations at the taps must be sealed with a fire rated wet area sealant.

Pipes should be at least 20mm clear of studs and be clear of the wall linings and supported by battens. See Figure 40 and Figure 41 for 60/60/60 FRL construction. In this construction, baffles are not required in the cavity space.

4.8 ELECTRICAL PENETRATIONS

Where the installation of power boxes and switches on separating walls cannot be avoided, the boxes should be of an approved and tested type. Manufacturers of approved products include HPM Industries Pty Limited (Part No. 430) and Tyco Distribution. Install in accordance with manufacturer's instructions but note the following:

(a) No more than two electrical boxes are permitted between adjacent studs.
(b) Seal around boxes with Fire Barrier Silicone or as recommended by manufacturer.

For walls where a FRL of 90/90/90 is required, a baffle consisting of two layers of 16mm fire resistant plasterboard must be inserted tightly in the cavity and extend at least 300mm above and below the tap. See Figure 42 and Figure 43.

(c) Baffles, if required, must fit tightly between studs and extend 300mm above and below the outlet.
(d) Sound absorbing material, eg dense fibre-glass, should be placed behind outlets.
(e) Avoid having boxes back to back and, if possible, locate between different studs.

While manufacturers may have satisfactory tests for back-to-back configurations, the above recommendations are good practice.

For further information on electrical penetrations contact relevant manufacturers.

4.9 STEEL FRAME SEPARATING WALLS

A range of steel framed walls, load bearing and non-load bearing, are described in the James Hardie Fire and Acoustically Rated Wall Design Manual. A dual frame wall included in this range exceeds Rw 60. Non-loadbearing steel framed walls may be used in multi-storey Class 2 and 3 buildings without limits on the number of floors.

4.10 JAMES HARDIE SEPARATING WALL ALTERNATIVE

Where the builder prefers to continue erecting the frame without pausing to sheet the separating wall before the side walls are stood, blocking can be introduced to allow the Villaboard lining to be fixed after all framing is in position.

For blocking details refer to Multi-Residential Timber Framed Construction Design and Construction Manuals.

5 DETAILS

4.11 EXTERNAL WALLS

4.11.1 General

Where the BCA requires an external wall to be fire rated in residential construction, an appropriate external wall can be created starting from the systems already detailed and adding one of James Hardie's external cladding products as well as vapour permeable sarking.

4.11.2 Vapour permeable sarking

Vapour permeable sarking must be installed in the outside linings, between the external fibre cement layer and the water and fire resistant plasterboard. The vapour permeable sarking must be a breather type sarking eg ACI Sisalation 499 or Tyvek Radiant Barrier™.

4.11.3 External fibre cement layer

The external layer may be any of the range of James Hardie fibre cement external sheet products that are 6mm or more in thickness, or plank products that are 7.5mm or more in thickness, ie HardiTex® base sheet, HardiFlex® sheets, PanelClad® sheets, HardiPlank® cladding, PrimeLine® or Linea™ Weatherboards.

4.11.4 Fasteners

For fasteners selection in an external wall application, refer to the relevant product fixing manual. However, the fastener length will need to be adjusted to account for the additional plasterboard thickness. For more information Ask James Hardie™ 13 11 03.

4.11.5 Cold climates

In cold climates, where condensation is likely to occur, a vapour barrier may be required to protect the plasterboard on the inside.

4.11.6 Construction details

Fire rated walls must not be supported on a non-fire rated structure. The wall can be supported on a concrete floor or masonry.

The linings must cover the entire wall on both sides, except in Class 1 Buildings, where the external fire protection need only extend to the eaves lining provided the eaves lining is non-combustible. For FRL 60/60/60 see Figure 44 and for FRL 90/90/90 see Figure 45.

More extensive details are given in Figure 46 (FRL 60/60/60) and Figure 47 (FRL 90/90/90).

NOTE

For design information on external wall refer to Section 6 of the Fire and acoustically rated walls Design Manual.

The various details outlined below have been referred to in the preceding text of this manual. These details are also available in CAD format at www.jameshardie.com.au

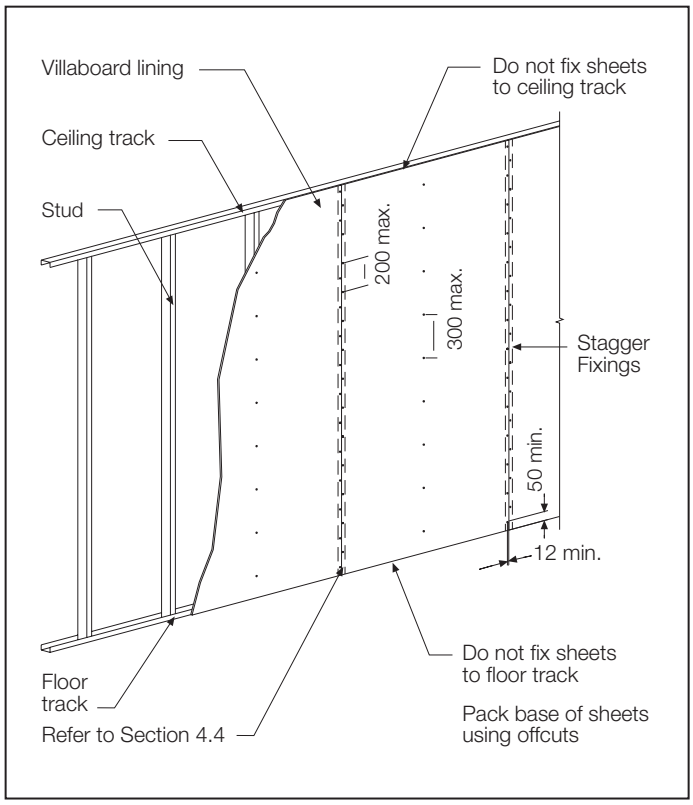

FIGURE 2 FIXING FIRST LAYER TO VILLABOARD LINING

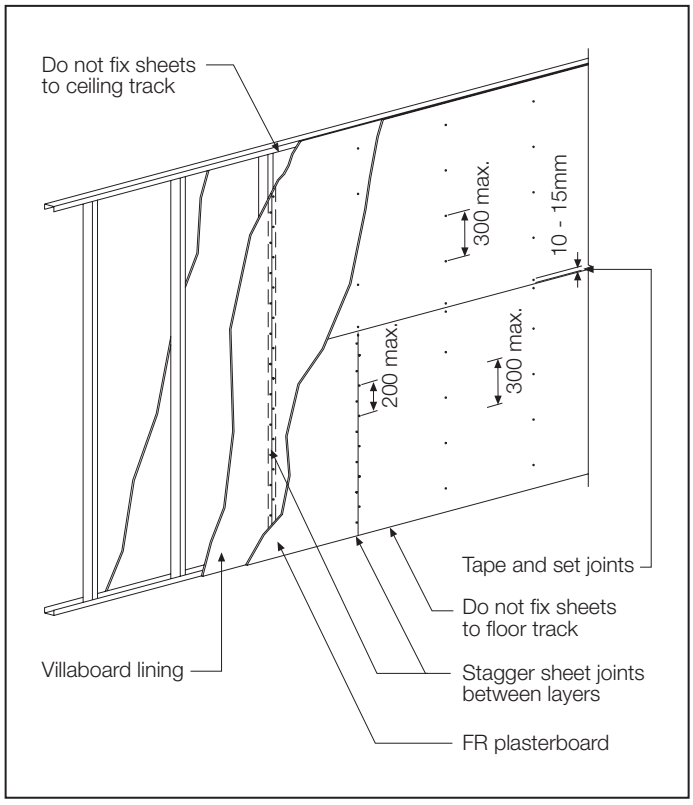

FIGURE 3 FIXING PLASTERBOARD OVER VILLABOARD LINING

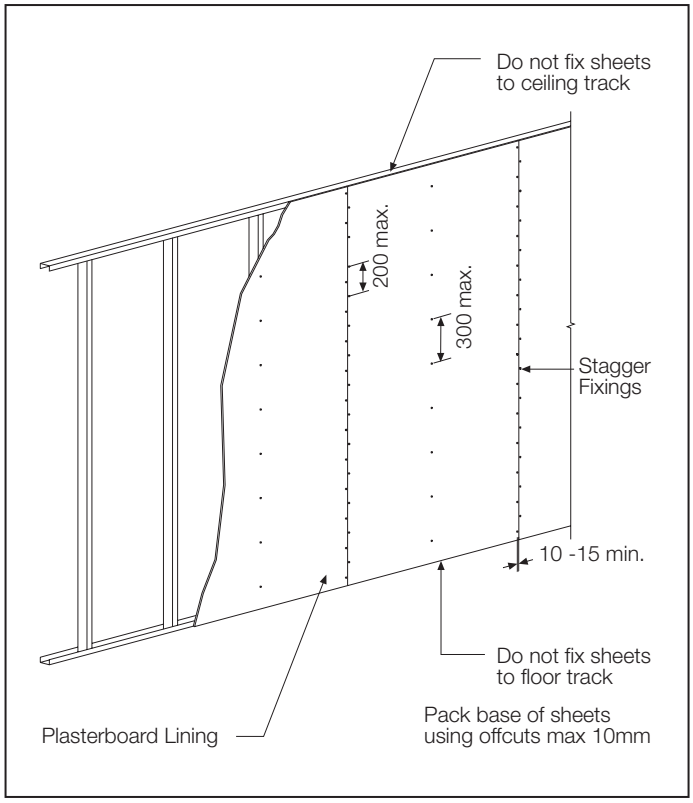

FIGURE 4 FIXING FIRST LAYER OF PLASTERBOARD

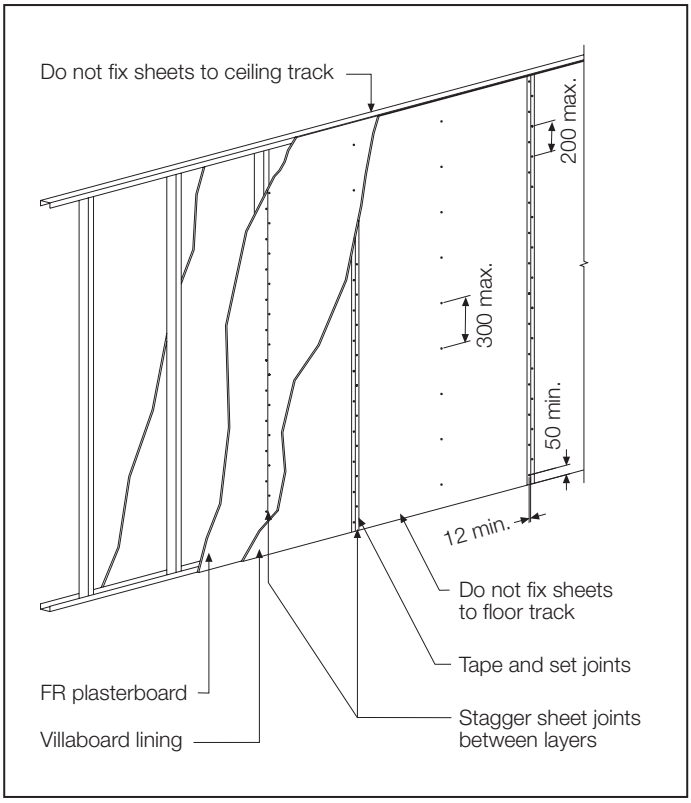

FIGURE 6 VERTICAL INSTALLATION OF VILLABOARD LINING AND PLASTERBOARD

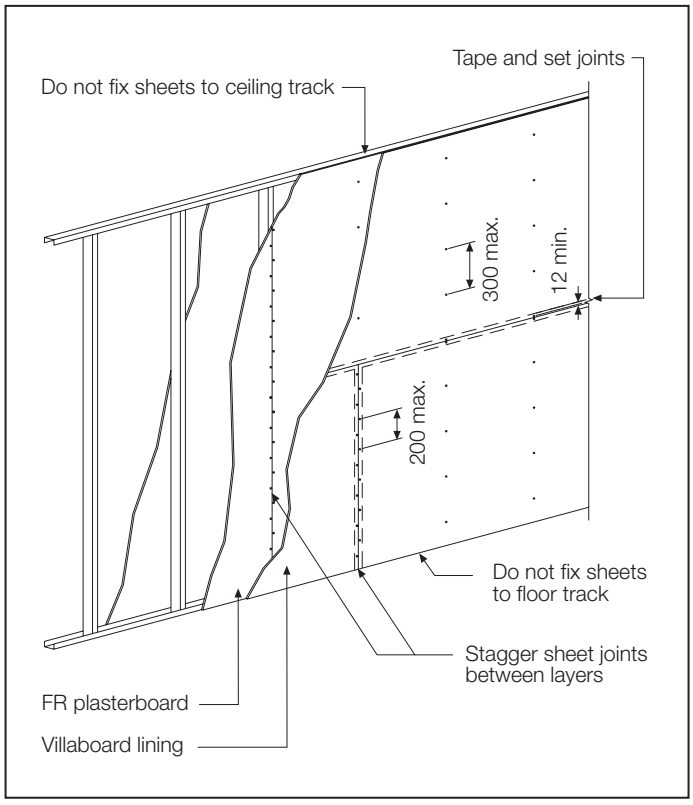

FIGURE 5 FIXING VILLABOARD LINING OVER PLASTERBOARD

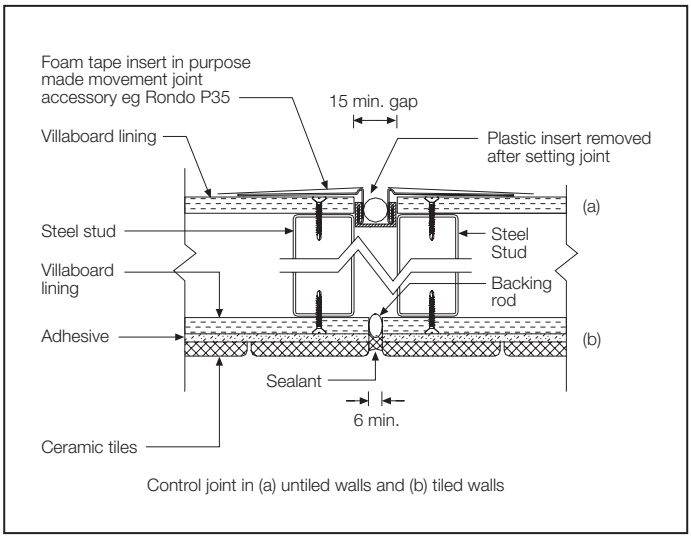

FIGURE 7 NON-FIRE RATED CONTROL JOINTS

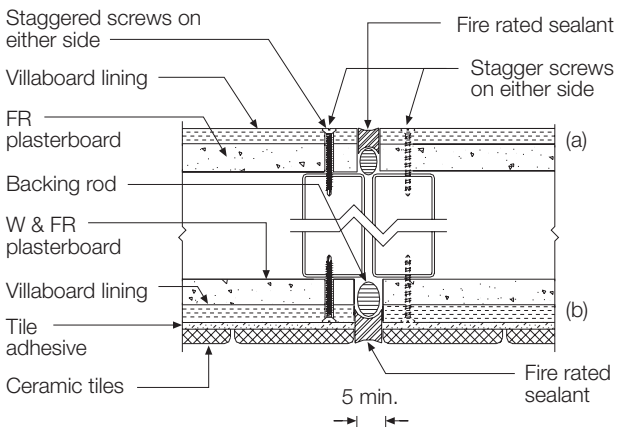

FIGURE 8 FIRE RATED CONTROL JOINTS

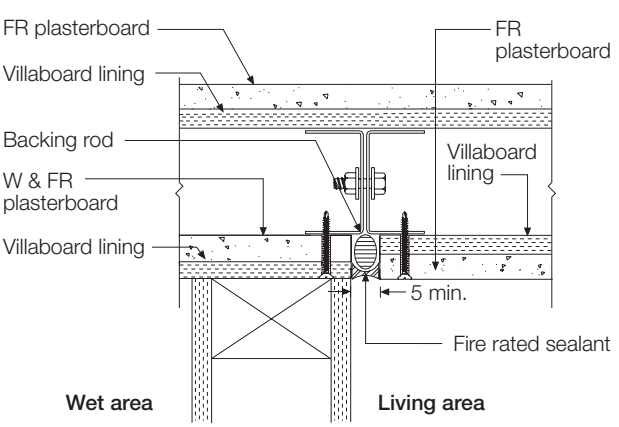

FIGURE 8A INTERCHANGING THE LINING LAYERS IN THE SAME RUN OF WALL

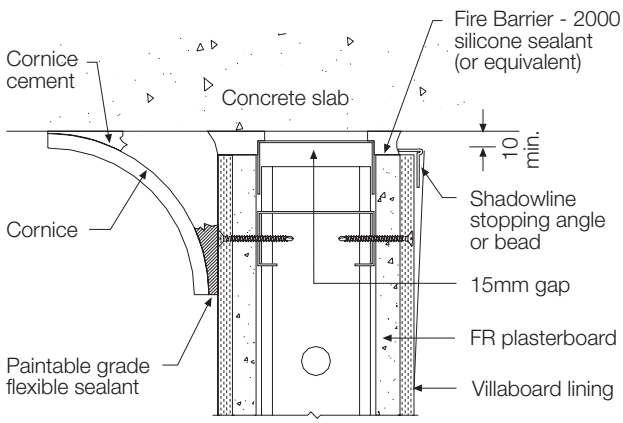

FIGURE 9 WALL/CEILING JUNCTION WITH DEFLECTION HEAD

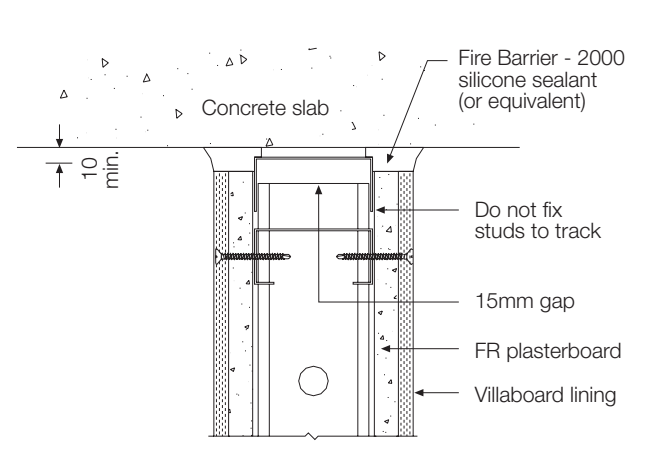

FIGURE 10 WALL/CEILING JUNCTION - ALTERNATIVE DETAILS

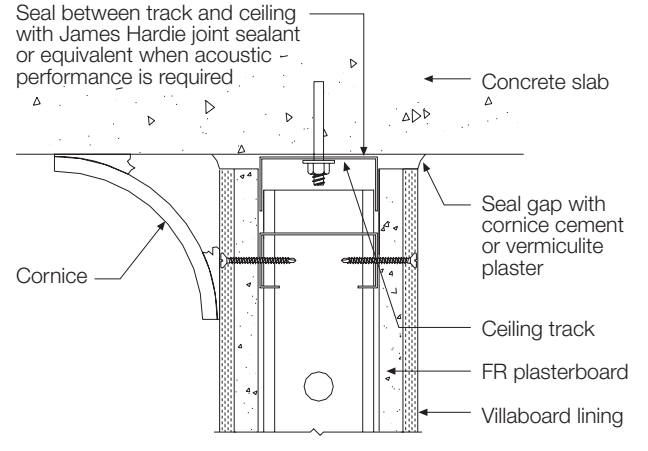

FIGURE 11 WALL/CEILING JUNCTION WITHOUT DEFLECTION HEAD

NOTE: Cornice not required to achieve fire or acoustic rating.

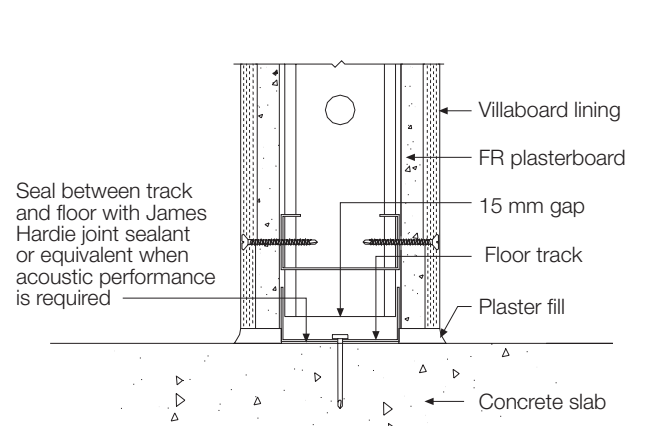

FIGURE 12 WALL/FLOOR JUNCTION

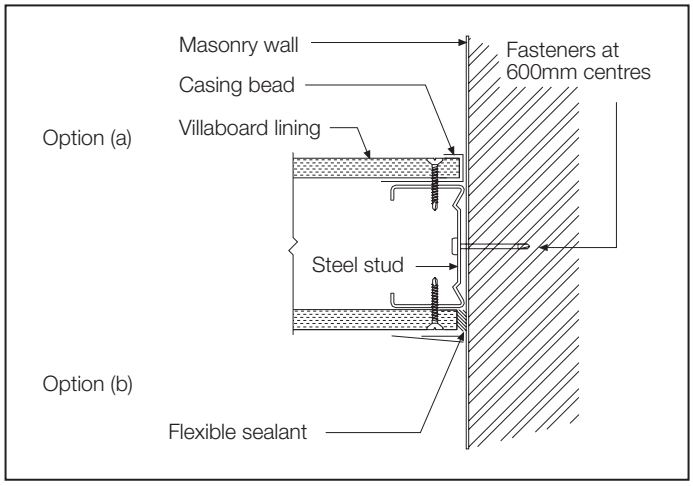

FIGURE 13 NON-FIRE RATED WALL INTERSECTION WITH MASONRY/CONCRETE

NOTE: For fire rated walls use Fire Barrier - 2000 Silicone Sealant (or equivalent).

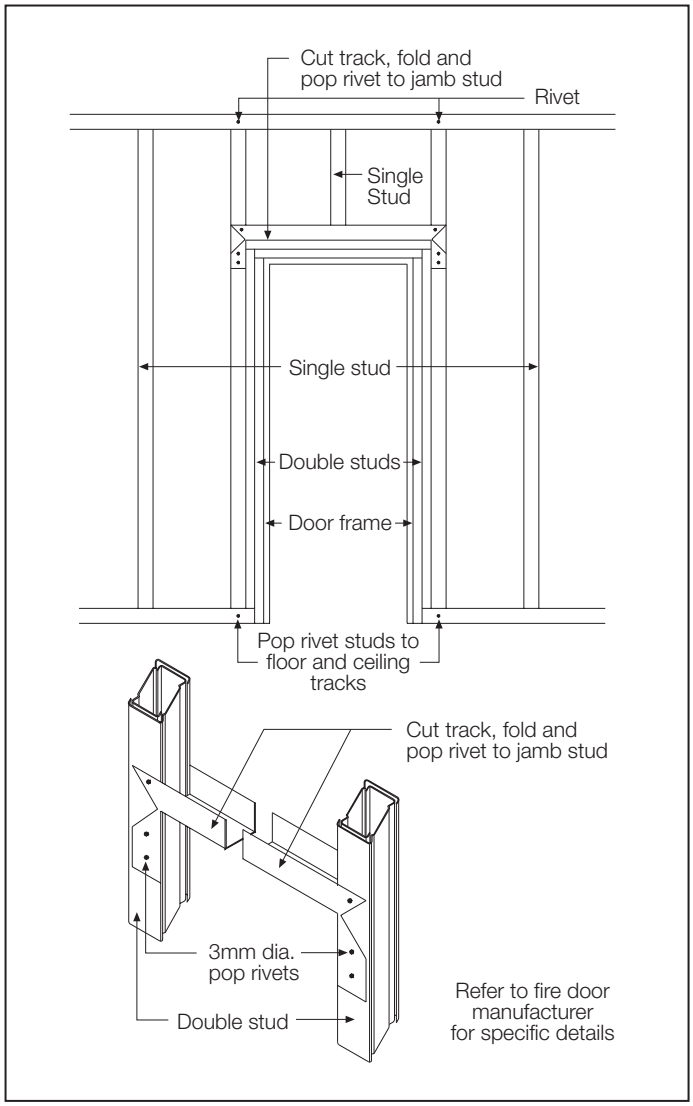

FIGURE 14 TYPICAL FRAMING AT A DOOR OPENING

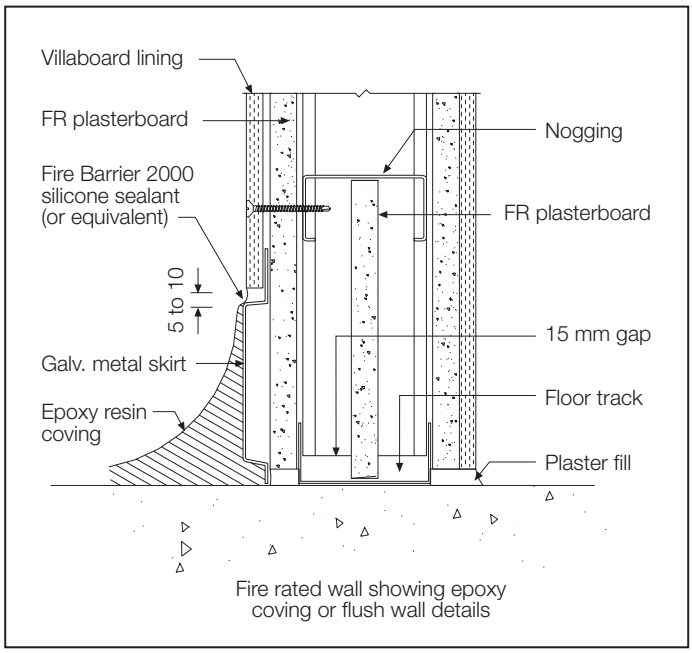

FIGURE 15 FIRE RATED WALL SHOWING EPOXY COVING/FLUSH WALL TO FLOOR DETAILS

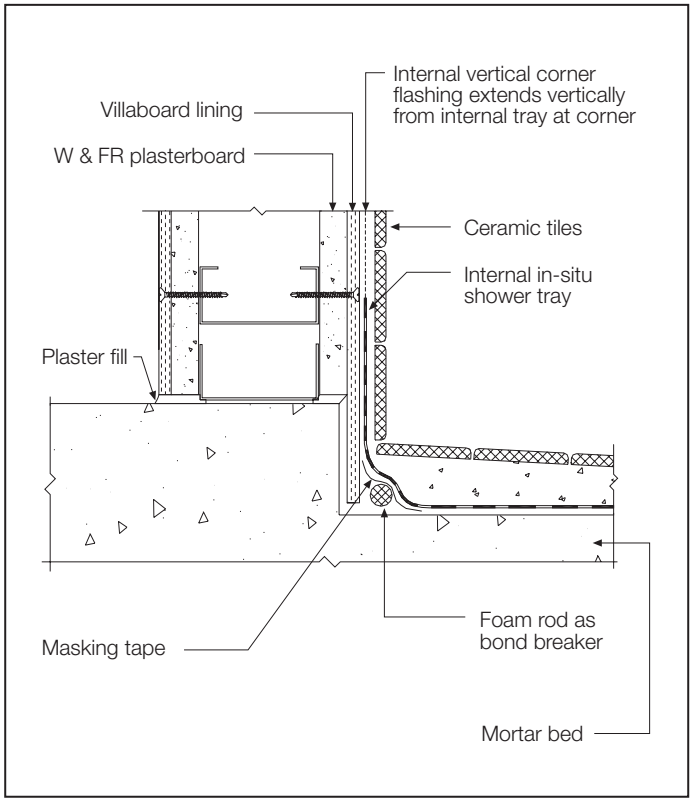

FIGURE 16 INSET SHOWER TRAY AT SLAB SET DOWN

NOTES

1. **Where practical provide a set-down in the concrete slab.**
2. **If W & FR plasterboard is not available apply a waterproof sealer or fix polyethylene industrial black film over the FR plasterboard.**
3. **For more information on wet area construction, refer to the James Hardie Wet Area Construction Design Manual.**

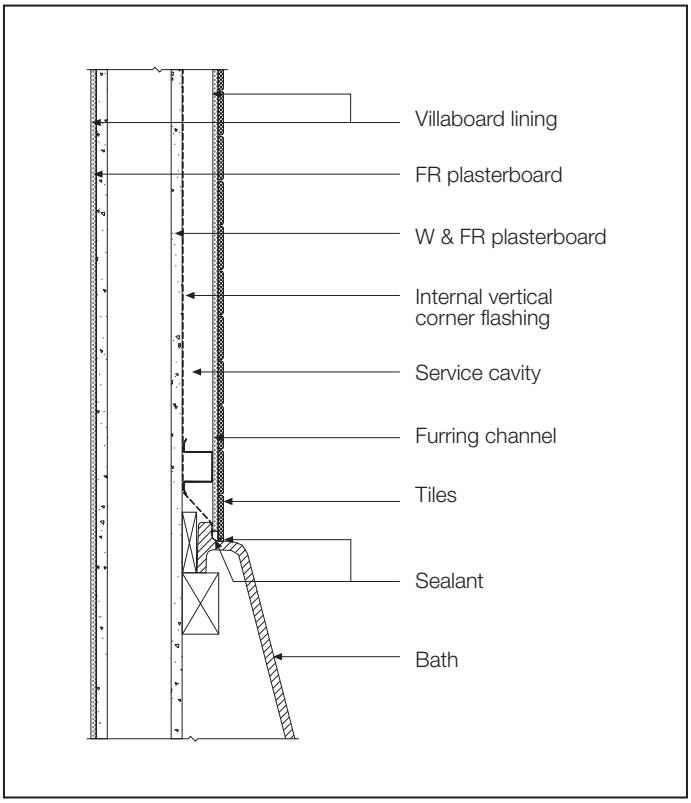

FIGURE 17 WALL/BATH RIM JUNCTION

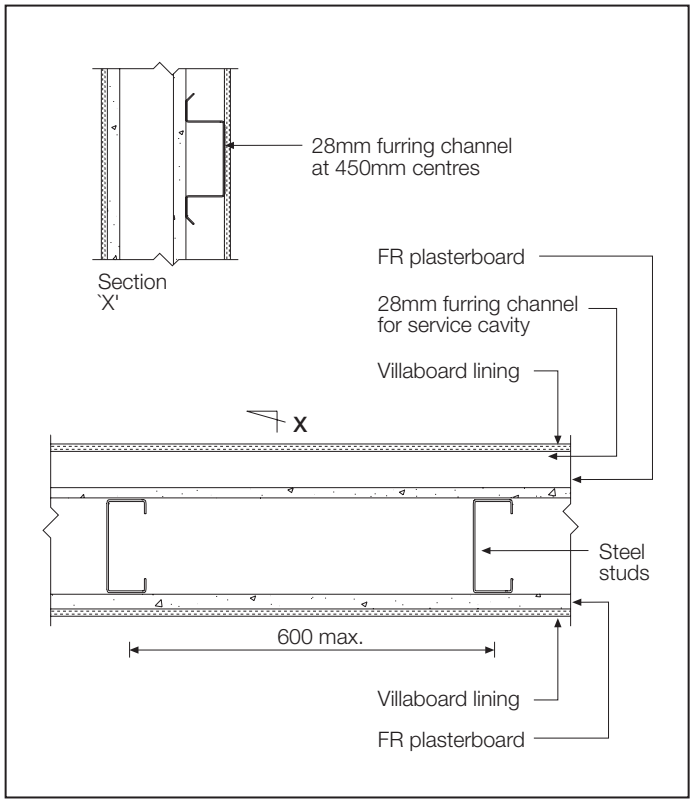

FIGURE 19 SINGLE STUD FRAME WITH SERVICE CAVITY

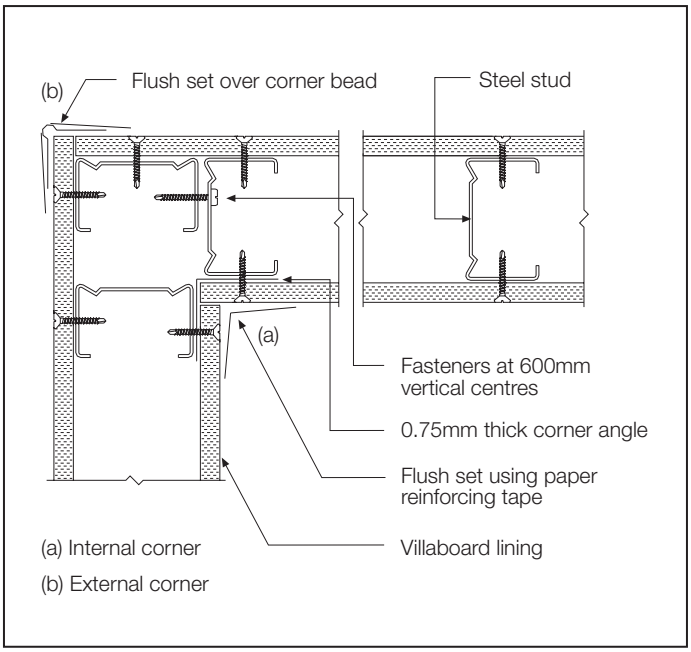

FIGURE 18 CORNER DETAILS

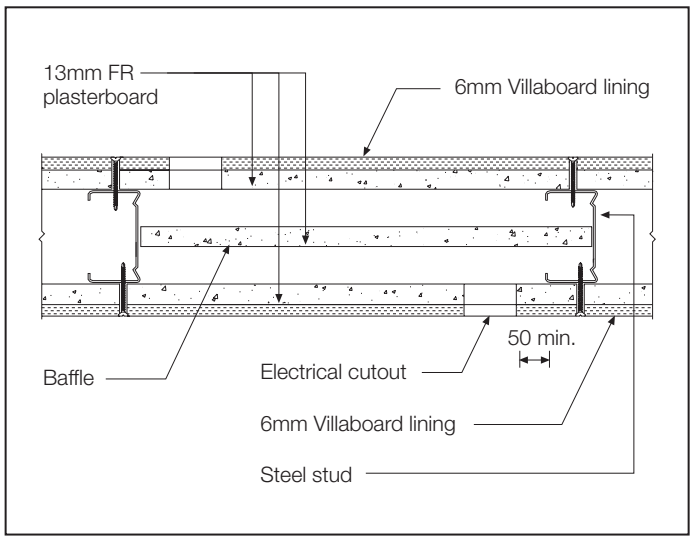

FIGURE 20 SPACING AND PROTECTION OF ELECTRICAL OUTLETS

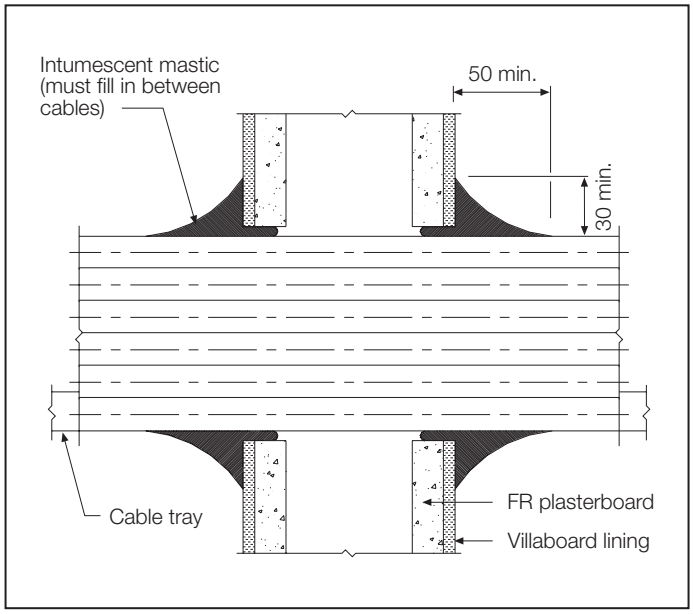

FIGURE 21 TYPIGAL MULTI-CABLE PENETRATION - SECTION

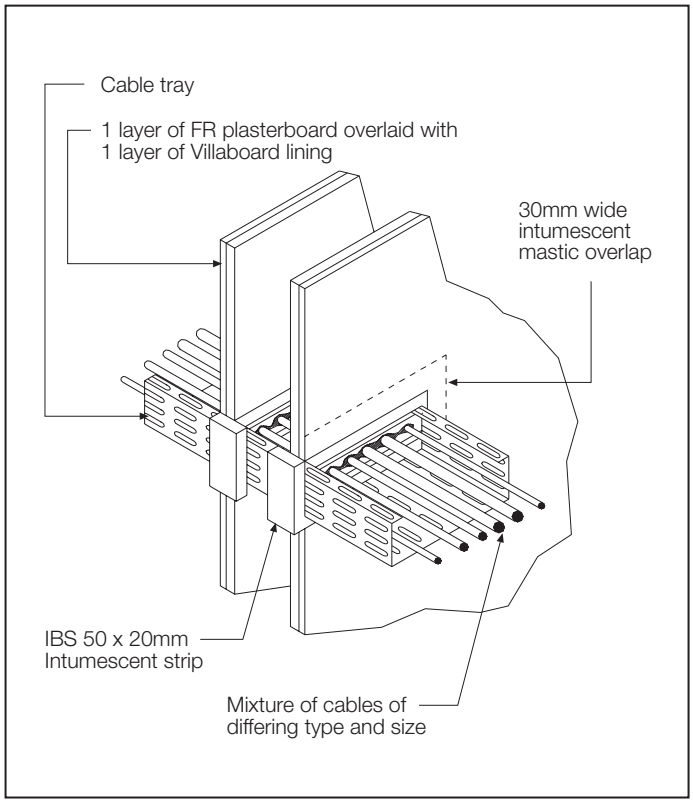

FIGURE 22 ISOMETRIC VIEW OF TYPICAL CABLE TRAY PENETRATION

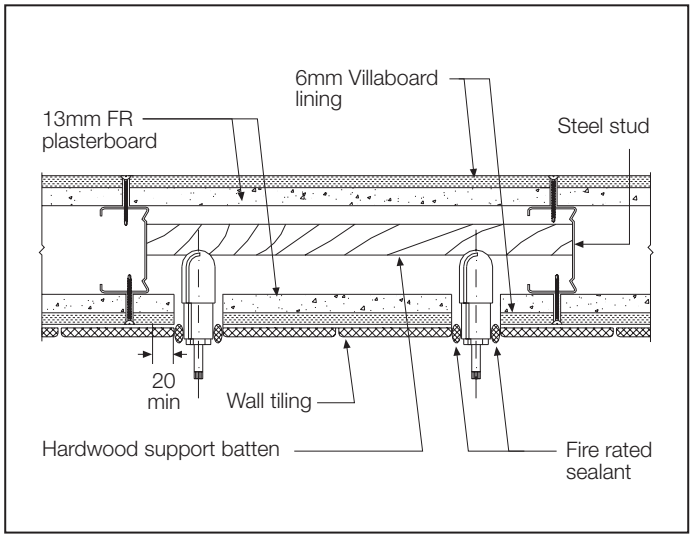

FIGURE 23 TAP PENETRATIONS FRL 60/60/60 CONSTRUCTION

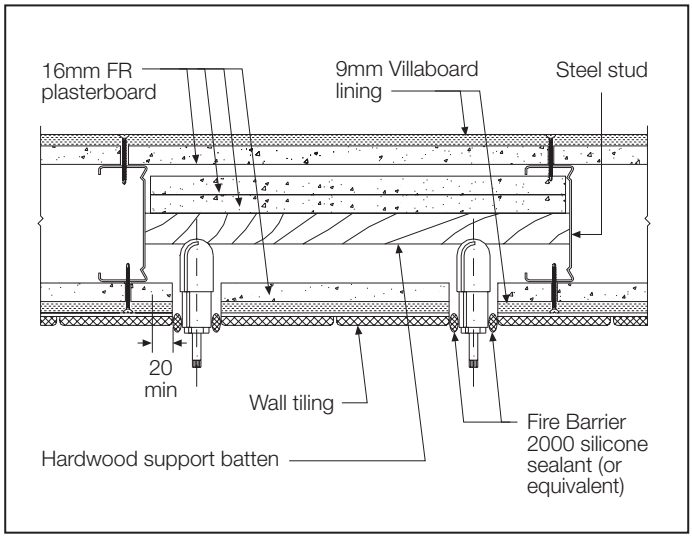

FIGURE 24 TAP PENETRATIONS FRL 120/120/120 CONSTRUCTION

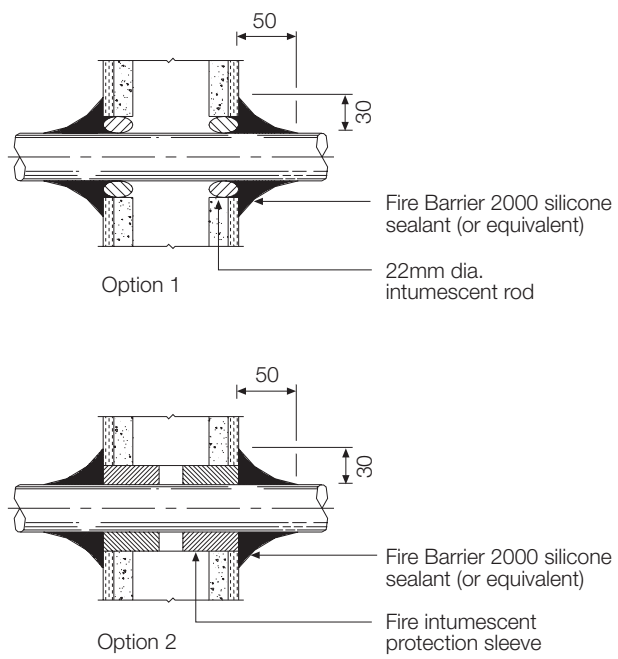

FIGURE 25 PIPES PENETRATING TYPICAL WALL SYSTEM

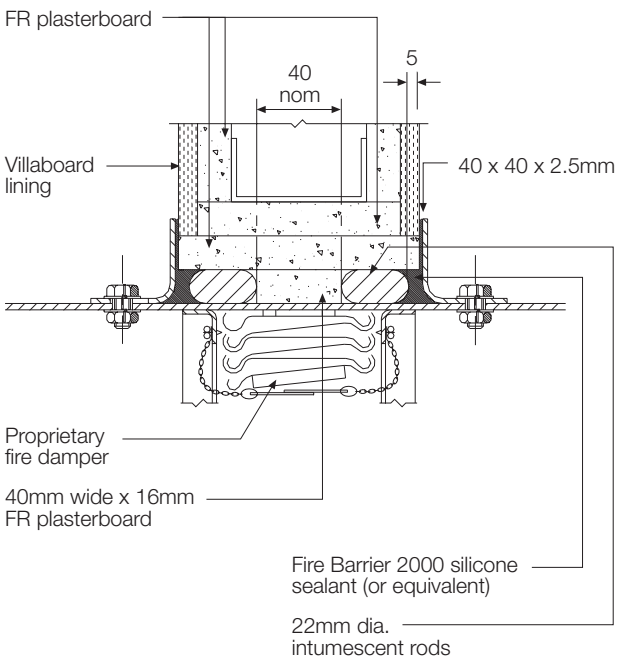

FIGURE 26 TYPICAL FIRE DAMPER INSTALLATION

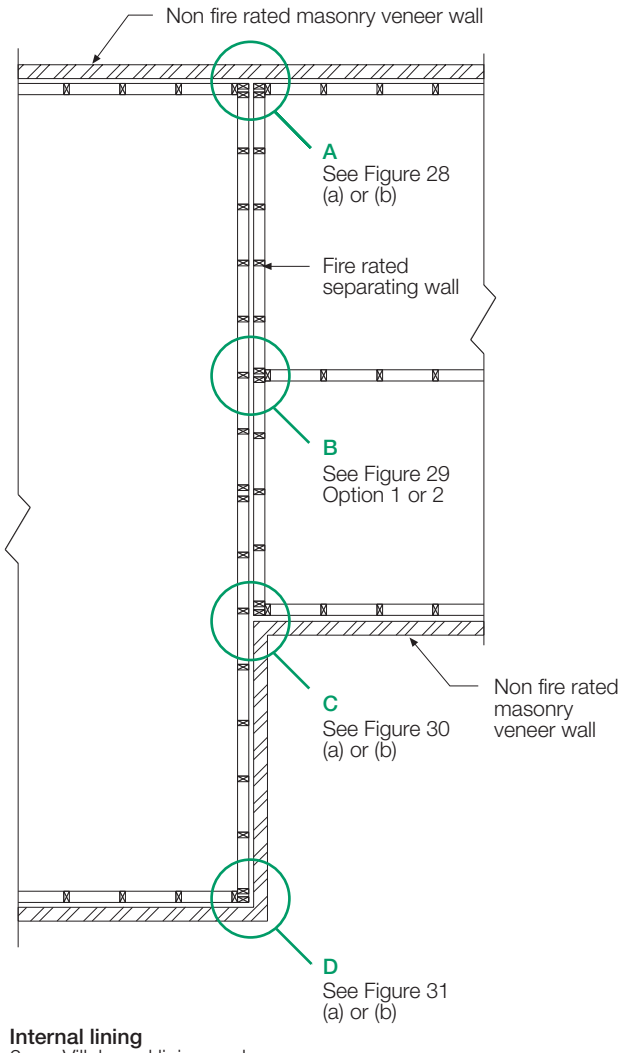

Internal lining
6mm Villaboard lining under:
13mm FR Plasterboard for 60/60/60 or
16mm FR Plasterboard for 90/90/90 on
both sides of wall frame

FIGURE 27 PLAN OF SEPARATING WALL

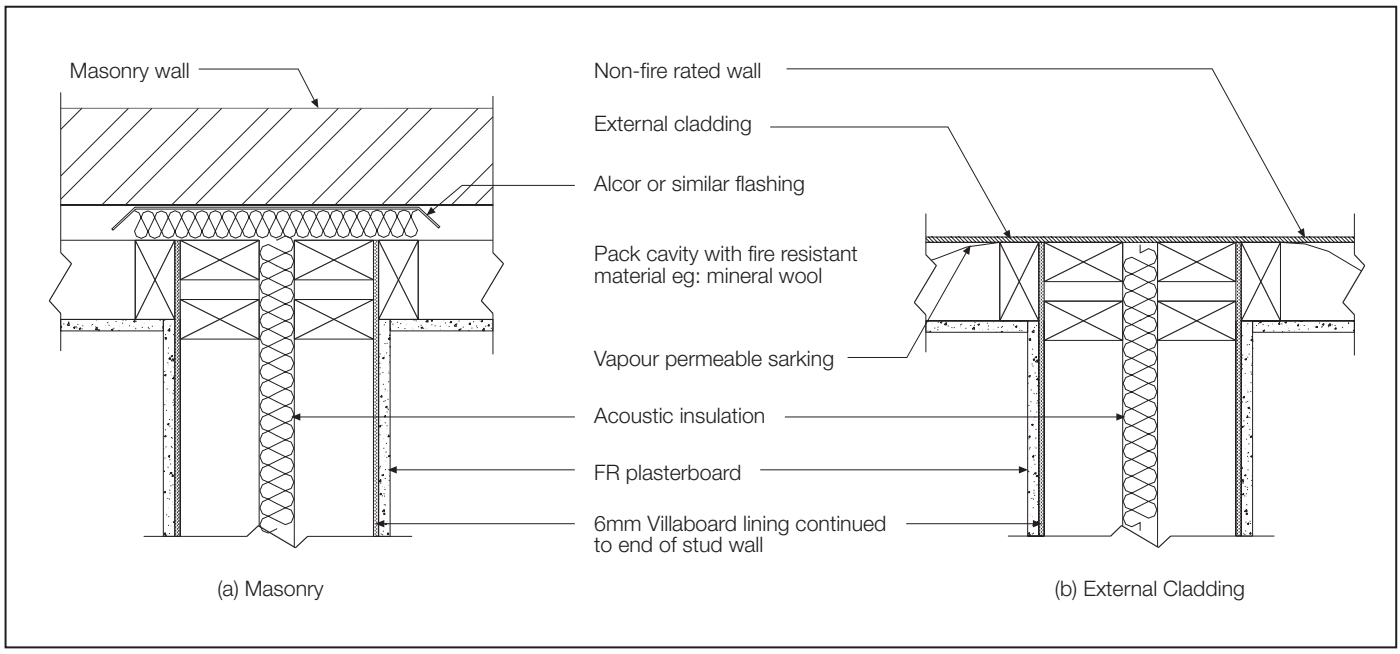

FIGURE 28 DETAIL A - AT EXTERNAL WALL

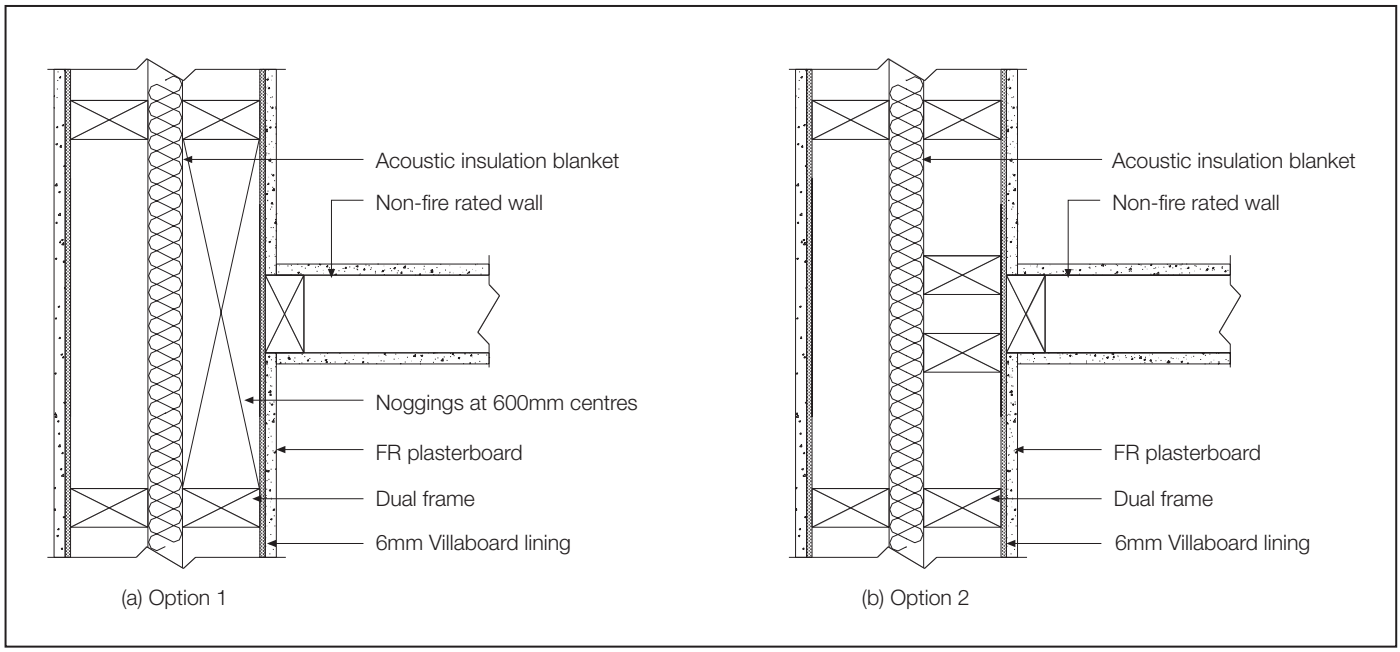

FIGURE 29 DETAIL B - JUNCTION WITH NON-FIRE RATED INTERNAL WALL

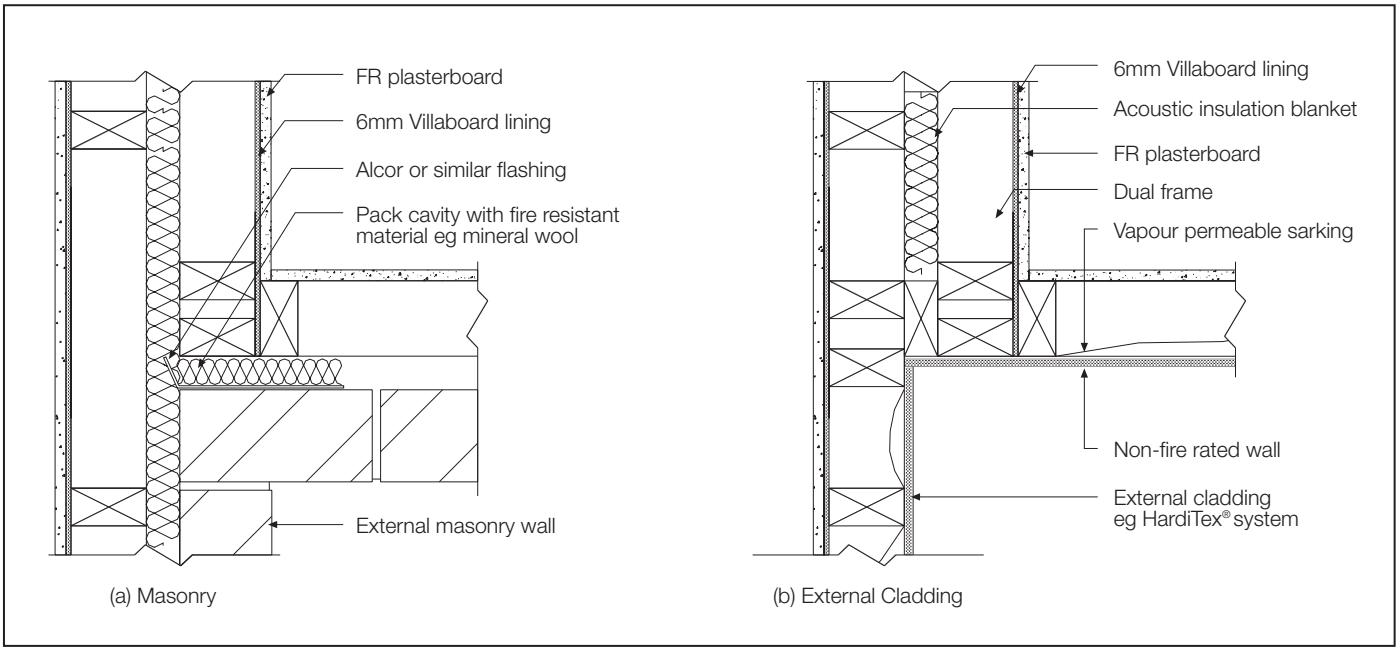

FIGURE 30 DETAIL C - RETURN ON EXTERNAL WALL

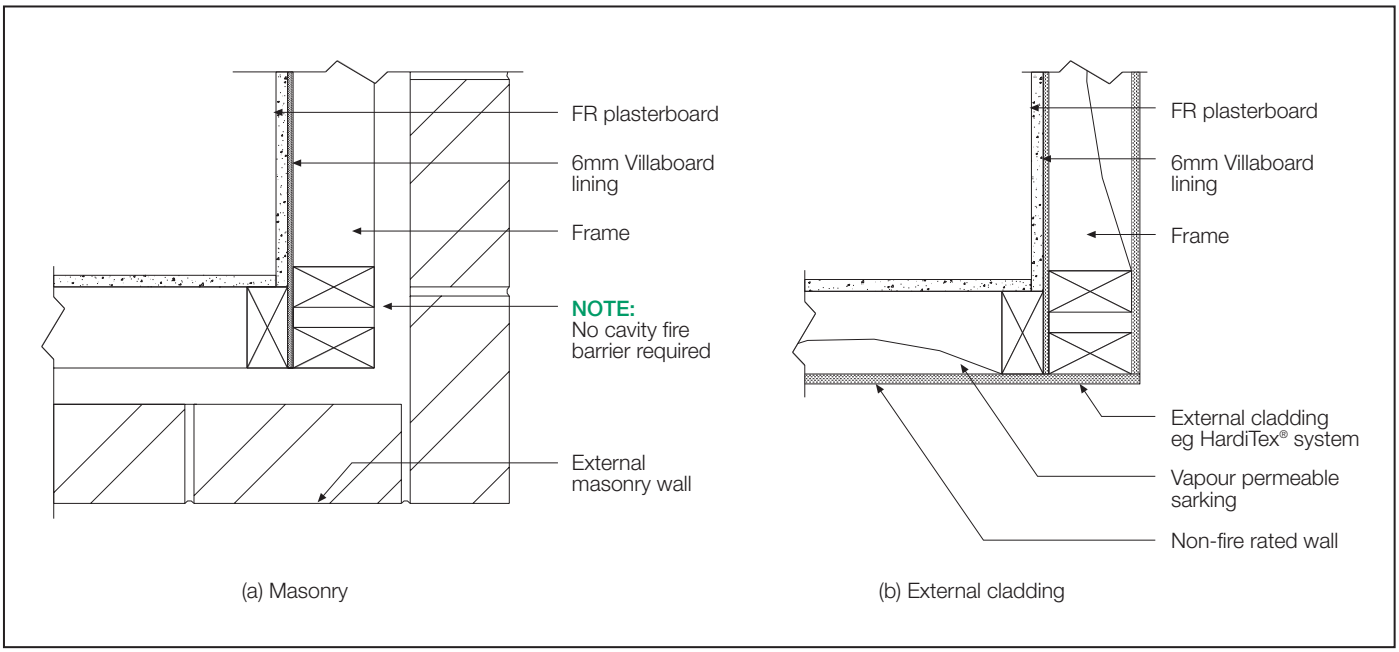

FIGURE 31 DETAIL D - EXTERNAL CORNER

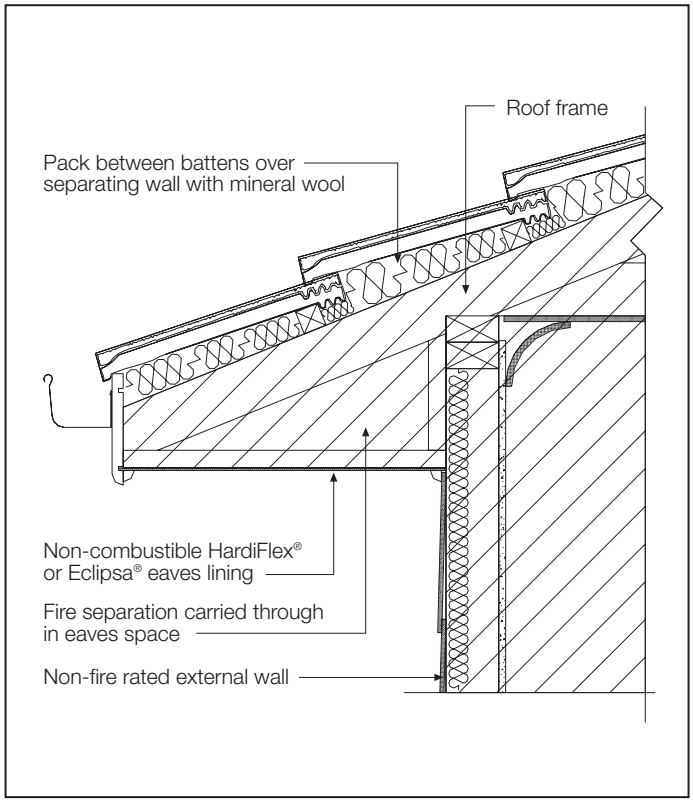

FIGURE 32 FIRE SEPARATION AT EAVES

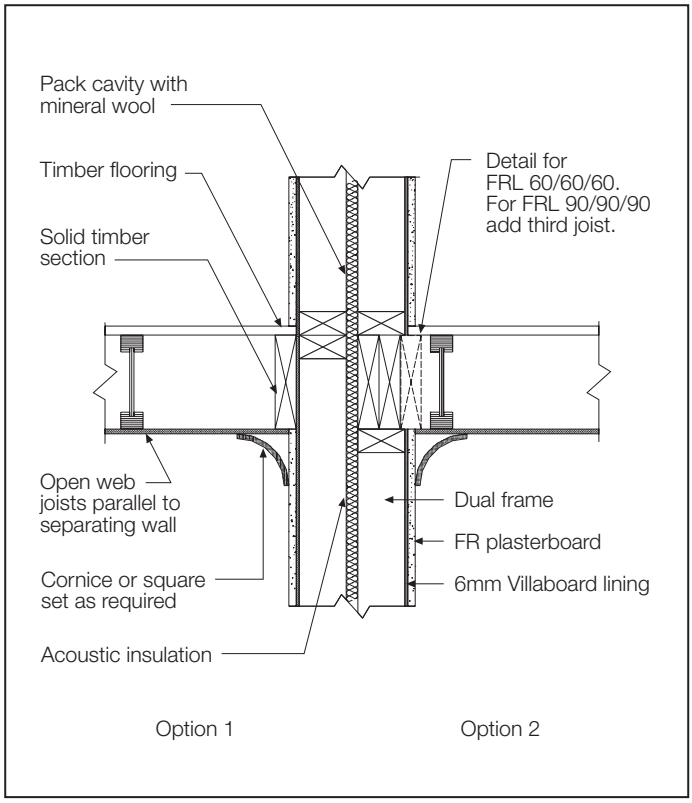

FIGURE 34 OPEN WEB JOISTS - PARALLEL TO WALL

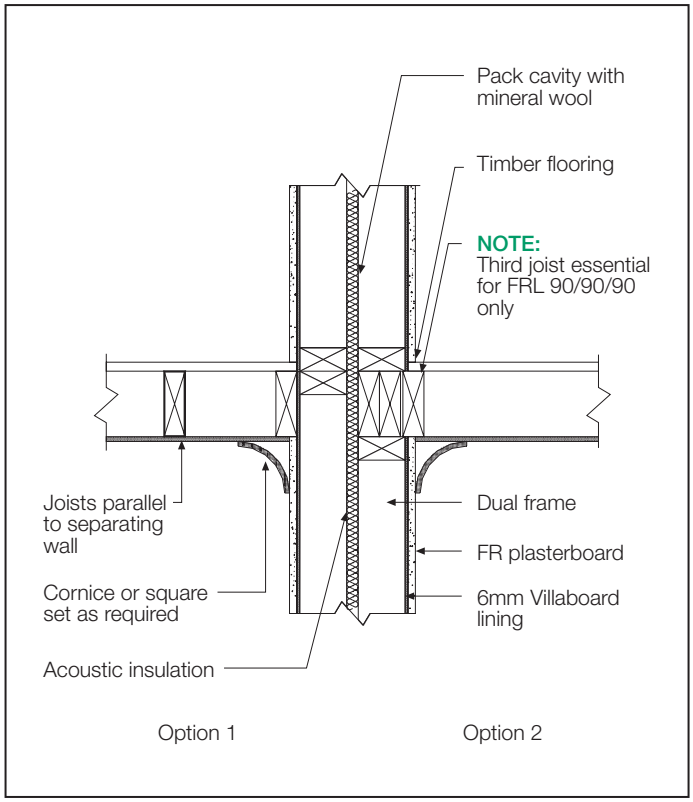

FIGURE 33 TIMBER JOIST - PARALLEL TO WALL

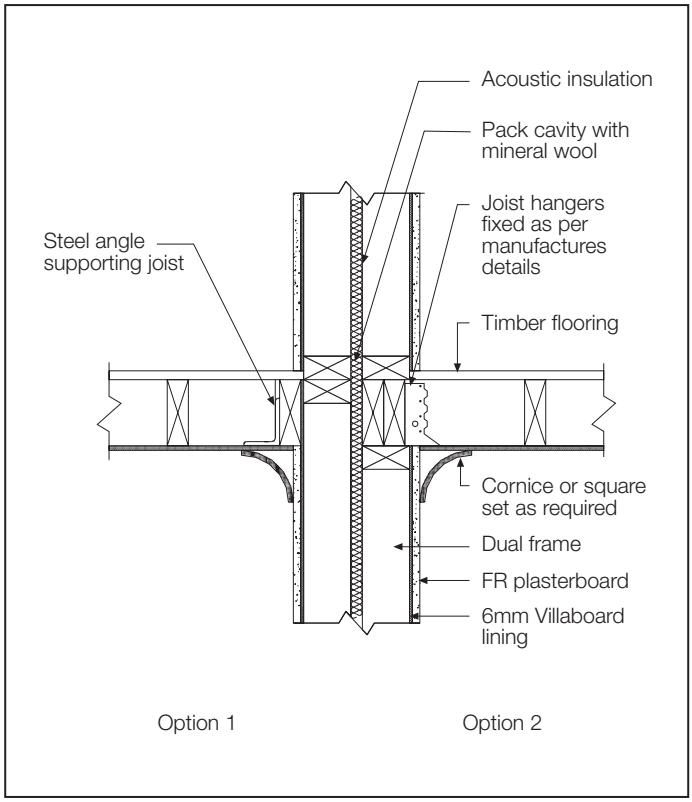

FIGURE 35 JOISTS TRANSVERSE TO WALL

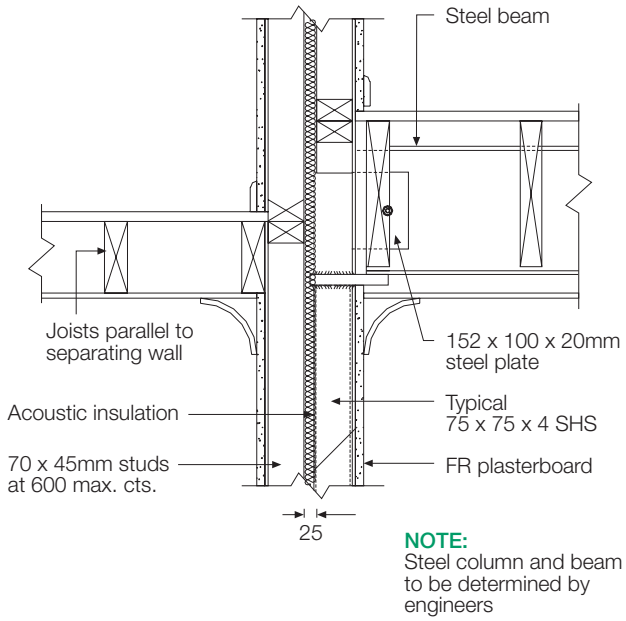

FIGURE 36 STEEL BEAM SUPPORT

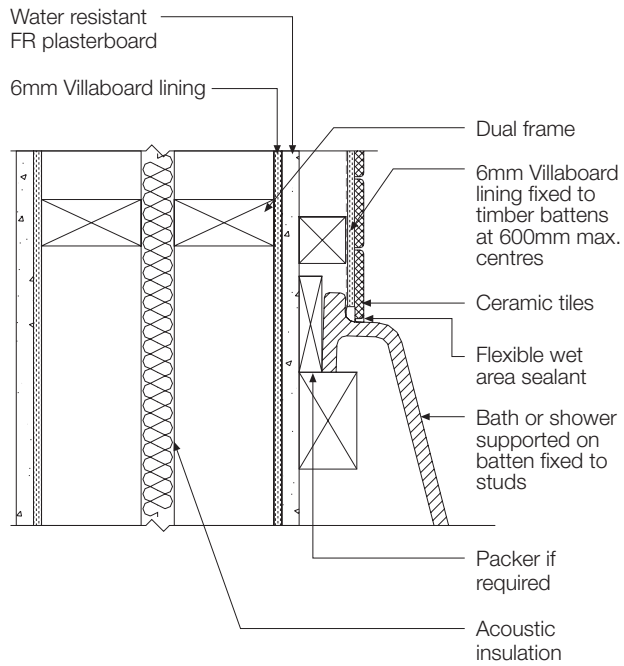

FIGURE 38 RECESS TO ACCOMMODATE THE BATH LIP

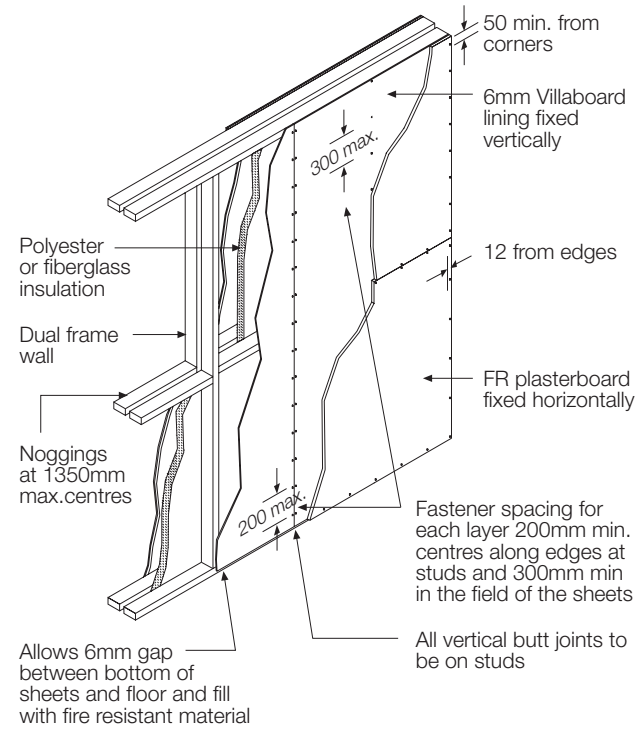

FIGURE 37 SHEET LAYOUT AND FIXING DETAIL

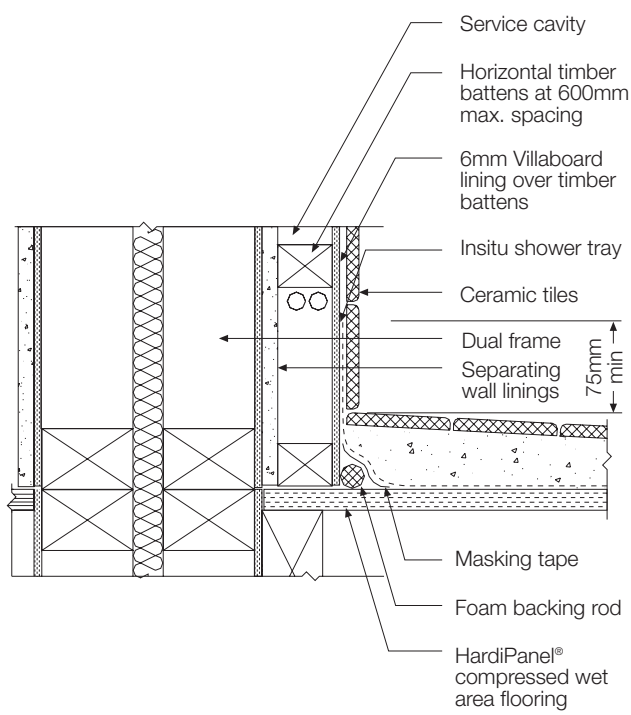

FIGURE 39 SERVICE CAVITY IN SHOWER RECESS TO ACCOMMODATE PIPES

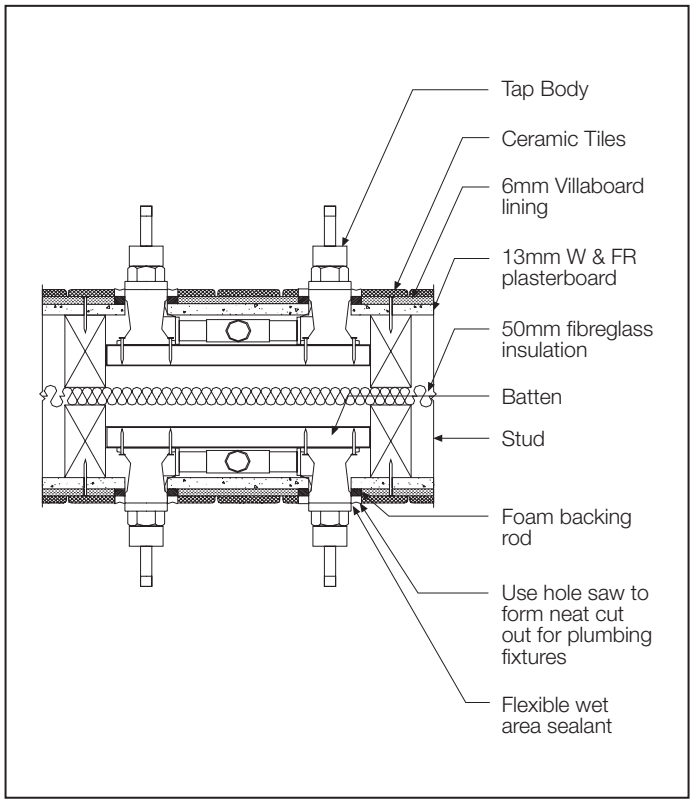

FIGURE 40 PENETRATIONS AT TAPS (PLAN) 60/60/60 FRL CONSTRUCTION

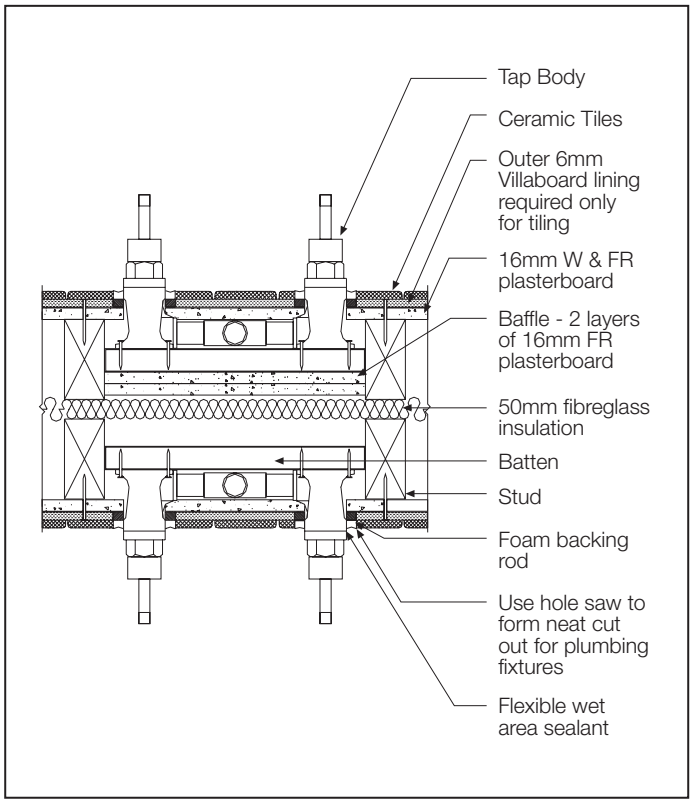

FIGURE 42 PENETRATION AT TAPS (PLAN) 90/90/90 FRL CONSTRUCTION

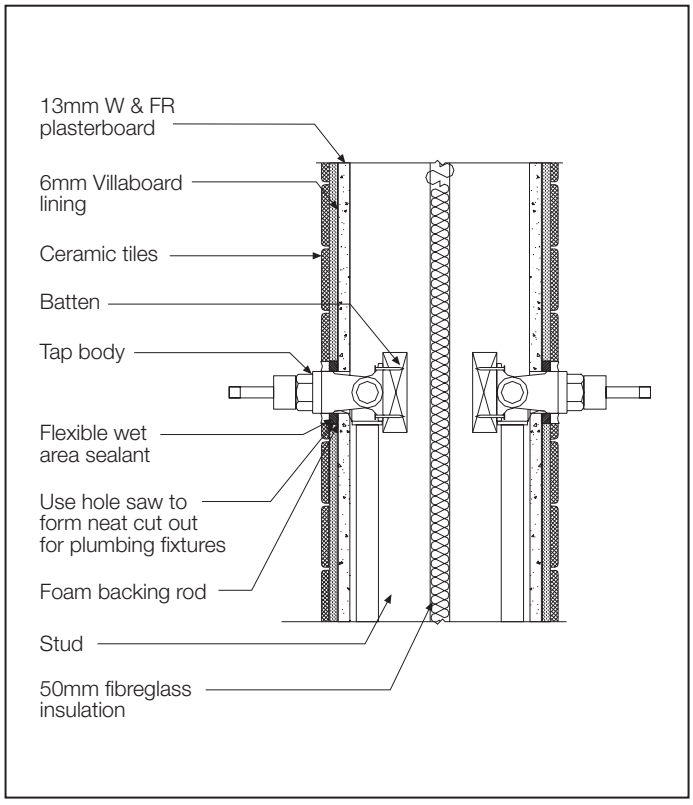

FIGURE 41 PENETRATIONS AT TAPS (ELEVATION) 60/60/60 FRL CONSTRUCTION

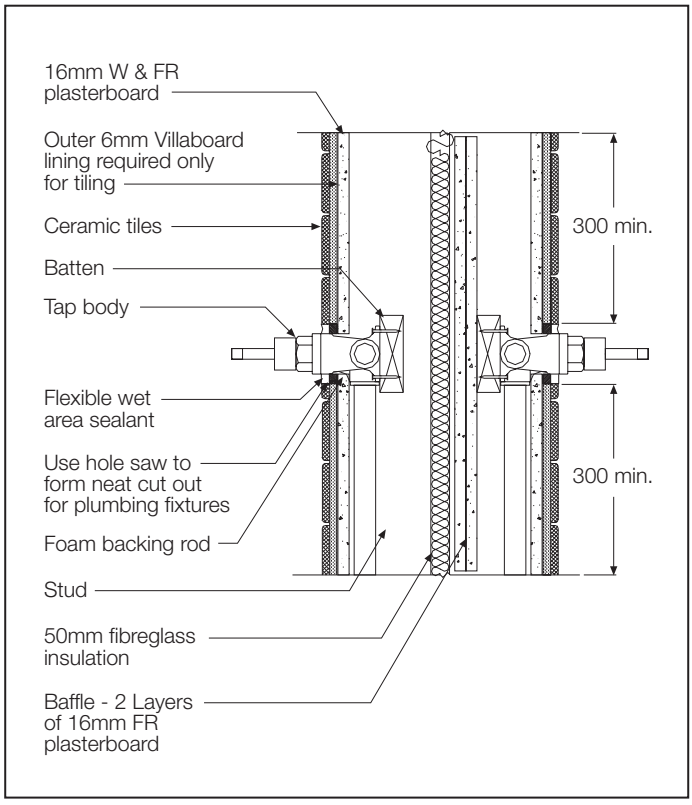

FIGURE 43 PENETRATION AT TAPS (ELEVATION) 90/90/90 FRL CONSTRUCTION

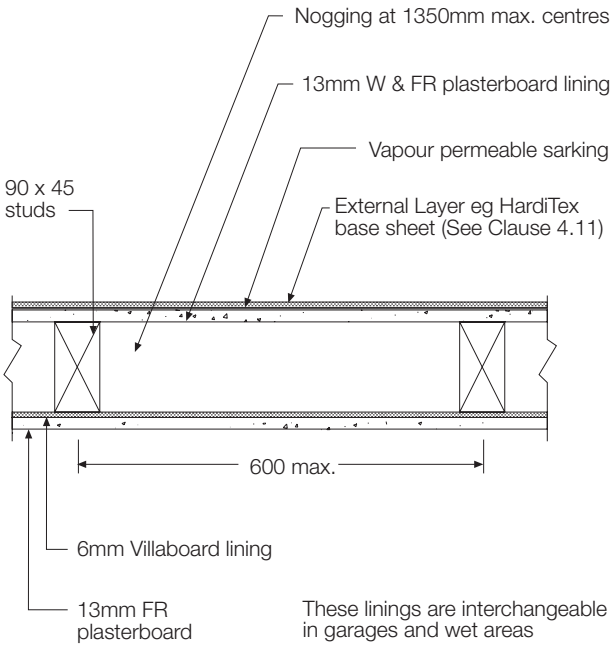

FIGURE 44 EXTERNAL WALL FRL 60/60/60

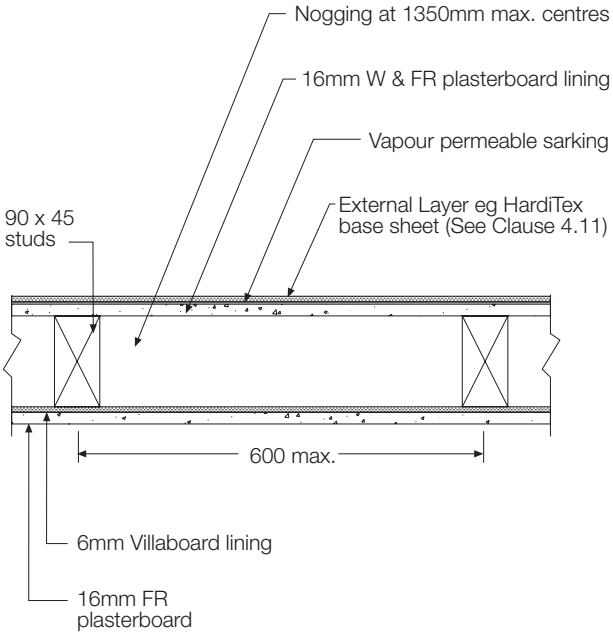

FIGURE 45 EXTERNAL WALL FRL 90/90/90

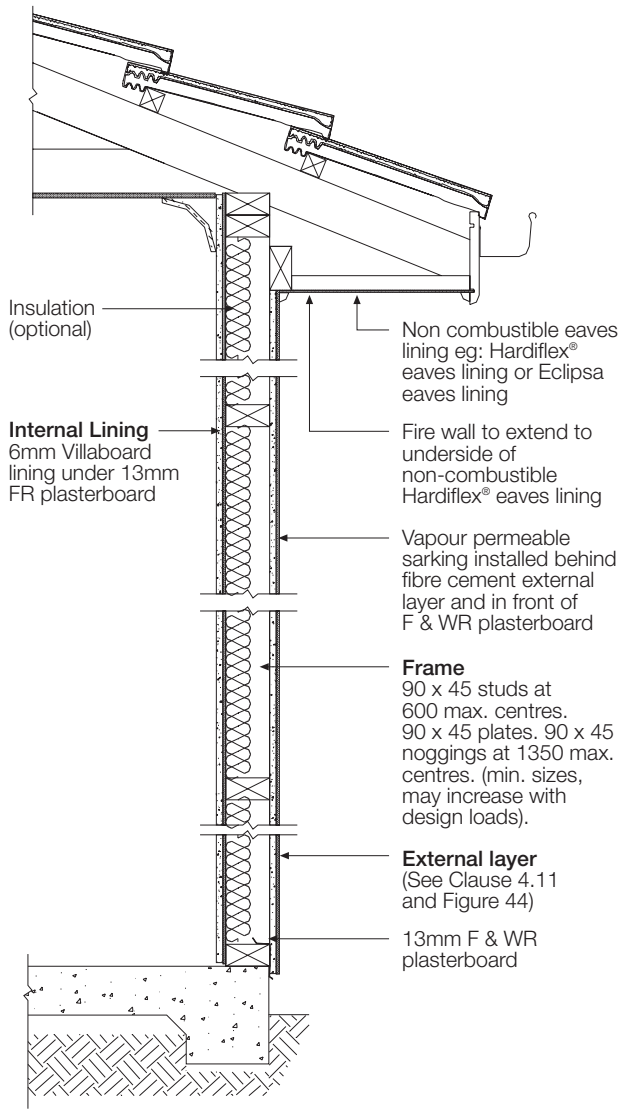

FIGURE 46 TIMBER-FRAMED EXTERNAL WALL FRL 60/60/60

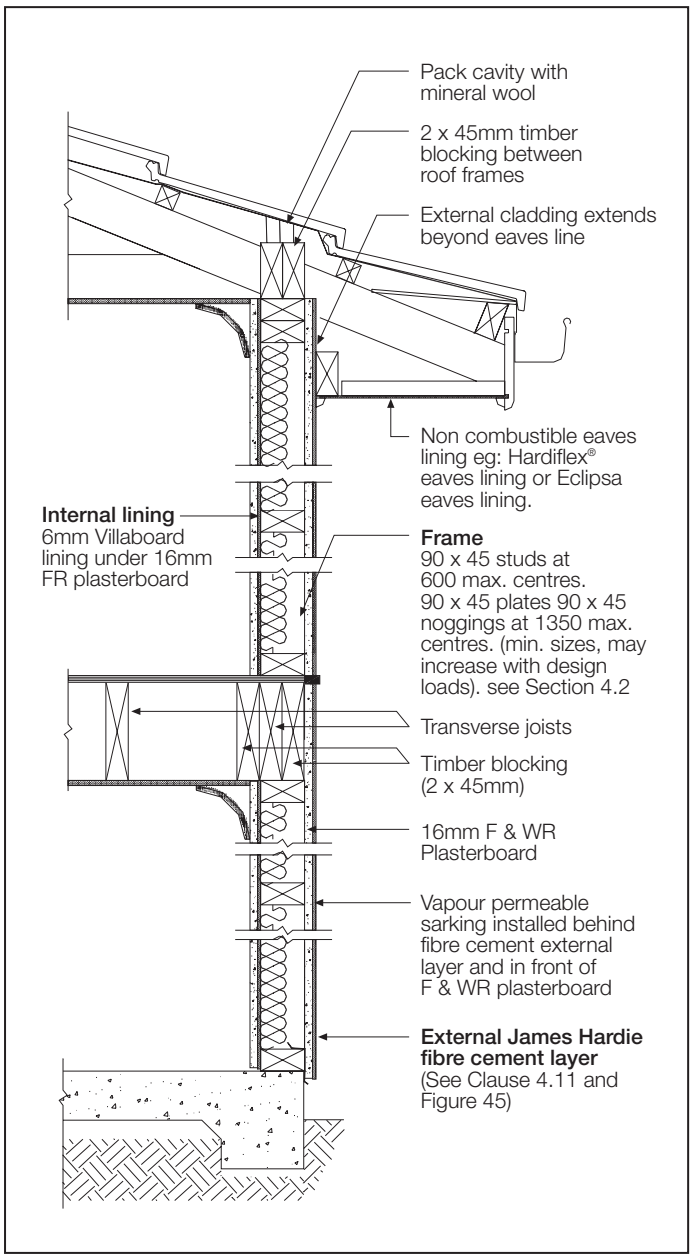

FIGURE 47 TIMBER-FRAMED EXTERNAL WALL FRL 90/90/90

Ask James Hardie™

Call 13 11 03

www.jameshardie.com.au

Front cover image: Aad Designs

© 2007 James Hardie Australia Pty Ltd. TM and ® denote a trade mark or registered mark owned by James Hardie Technology Limited.

JHML112621